2022 Z650RS ABS PARTS DIAGRAM

Fuel Evaporative System(CA)

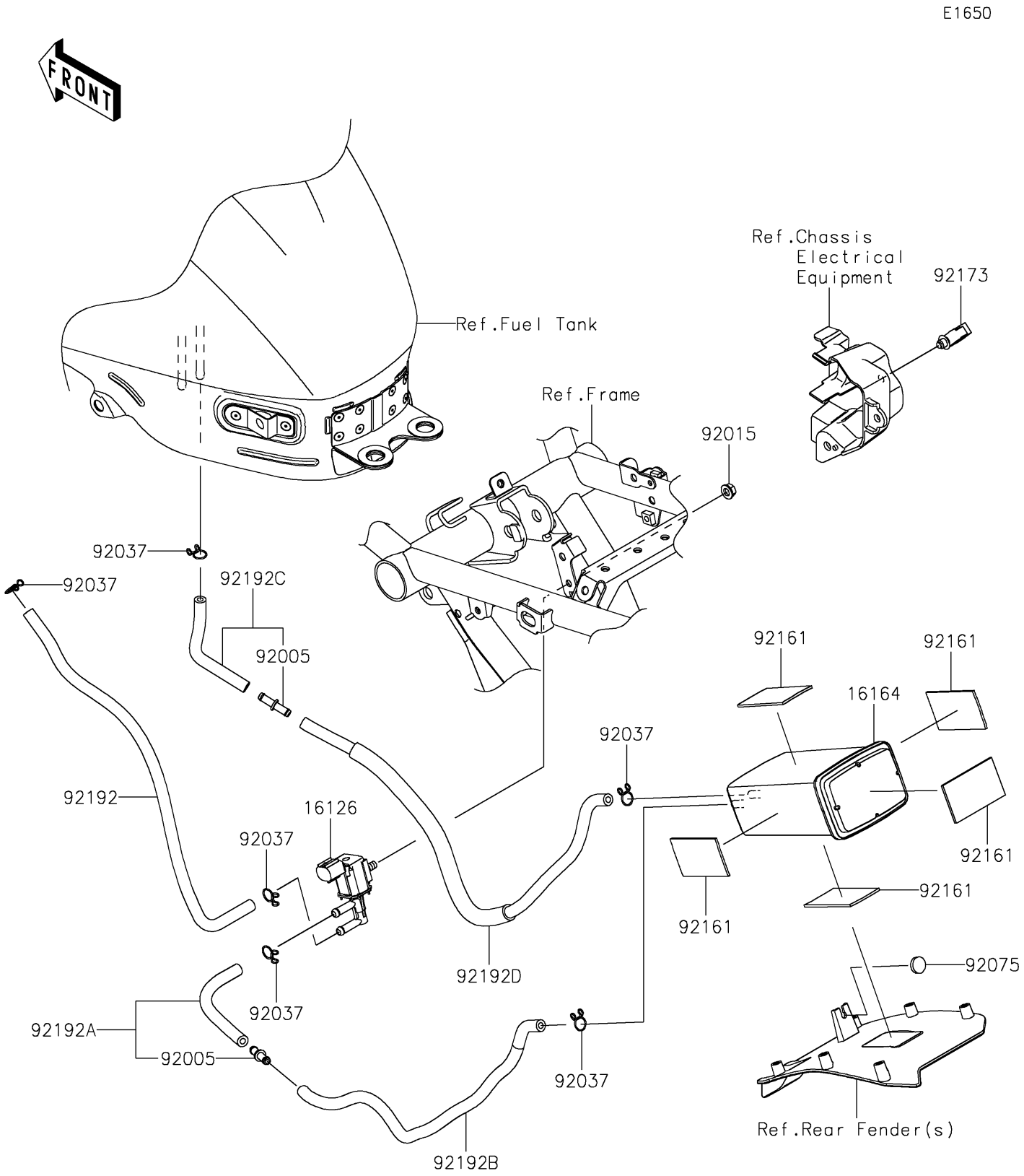

© 2025 Kawasaki Motors Corp., U.S.A.

2022 Z650RS ABS PARTS LIST

Fuel Evaporative System(CA)

ITEM NAME	PART NUMBER	QUANTITY
VALVE,SOLENOID (Ref # 16126)	16126-0705	1
CANISTER (Ref # 16164)	16164-0012	1
FITTING (Ref # 92005)	92005-0721	1
NUT,FLANGED,6MM (Ref # 92015)	92015-1367	1
CLAMP,TUBE (Ref # 92037)	92037-147	1
DAMPER,BOOST SENSOR (Ref # 92075)	92075-2113	1
DAMPER (Ref # 92161)	92161-1883	1
CLAMP,HOLDER CLIP (Ref # 92173)	92173-0868	1
TUBE,VALVE-THROTTLE BODY (Ref # 92192)	92192-1661	1
TUBE,VALVE-FITTING (Ref # 92192A)	92192-1700	1
TUBE,CANISTER(OUT)-FITTING (Ref # 92192B)	92192-2489	1
TUBE,TANK SIDE (Ref # 92192C)	92192-2490	1
TUBE,CANISTER(IN) SIDE (Ref # 92192D)	92192-2491	1

© 2025 Kawasaki Motors Corp., U.S.A.