2004 KX65 PARTS DIAGRAM

Front Hub

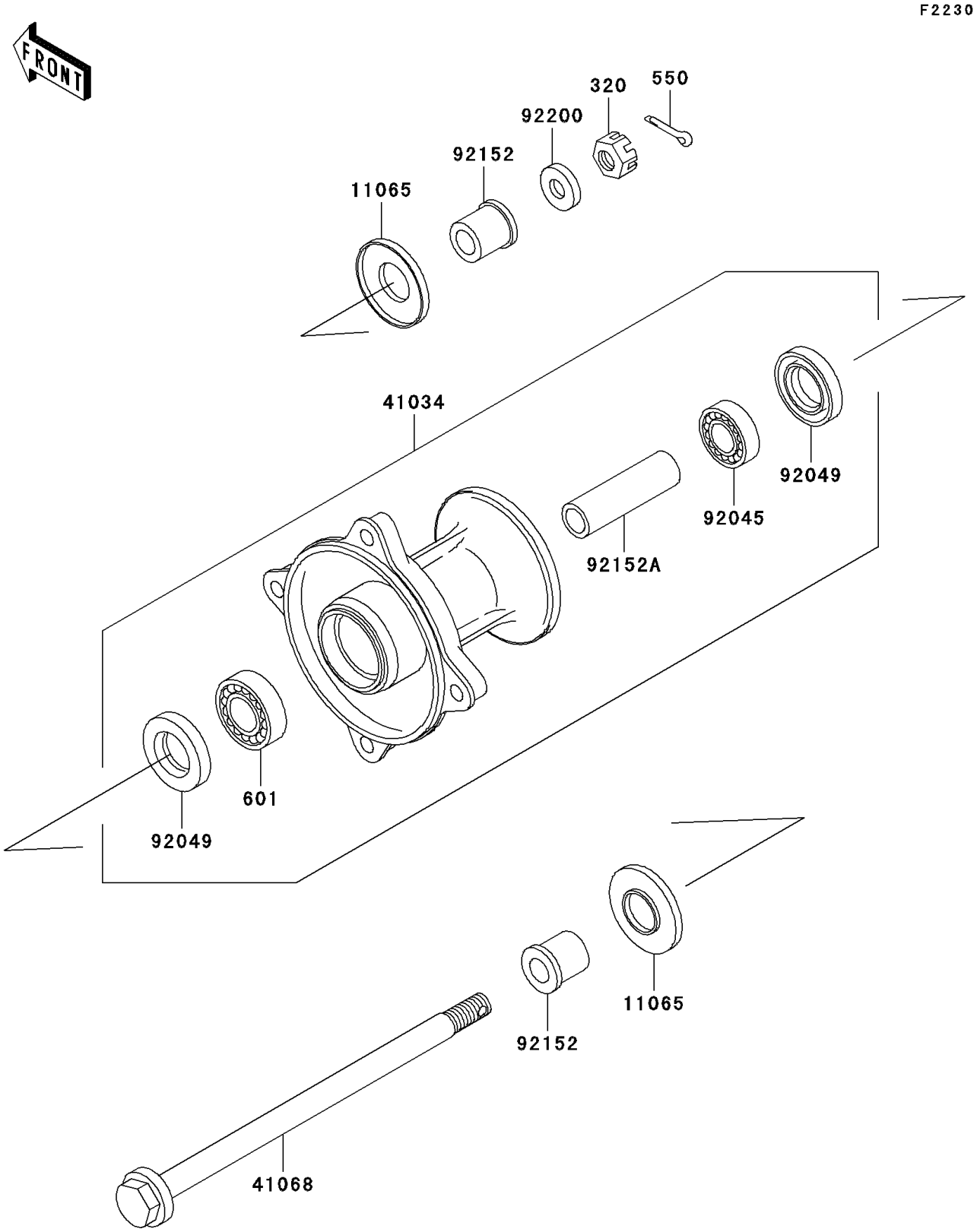

© 2024 Kawasaki Motors Corp., U.S.A.

2004 KX65 PARTS LIST

Front Hub

ITEM NAME	PART NUMBER	QUANTITY
NUT-CASTLE (Ref # 320)	320G1200	1
PIN-COTTER,3.0X25 (Ref # 550)	550D3025	1
BEARING-BALL,#6201UUC3 (Ref # 601)	601B6301UU	1
CAP (Ref # 11065)	11065-1137	2
DRUM-ASSY,FRONT BRAKE (Ref # 41034)	41034-1302	1
AXLE,FR (Ref # 41068)	41068-1418	1
BEARING-BALL,TMB201LLUC3/2A (Ref # 92045)	92045-1062	1
SEAL-OIL,TC20376.5 (Ref # 92049)	92049-1257	2
COLLAR,AXLE,L=15.5 (Ref # 92152)	92152-1196	2
COLLAR,FR BRAKE DRUM,L=59 (Ref # 92152A)	92152-1197	1
WASHER,12.3X23X2.3 (Ref # 92200)	92200-1004	1

© 2024 Kawasaki Motors Corp., U.S.A.