2022 NINJA® ZX™-10R PARTS DIAGRAM

Tires

F2210

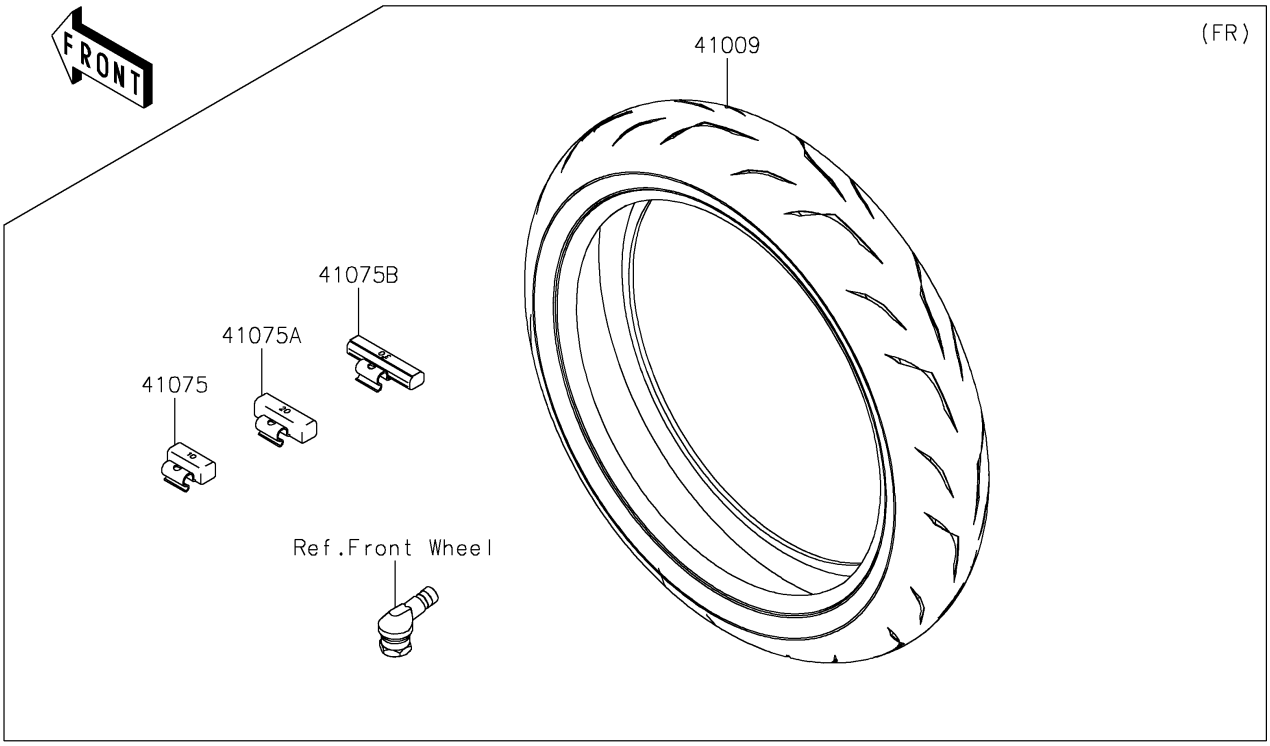

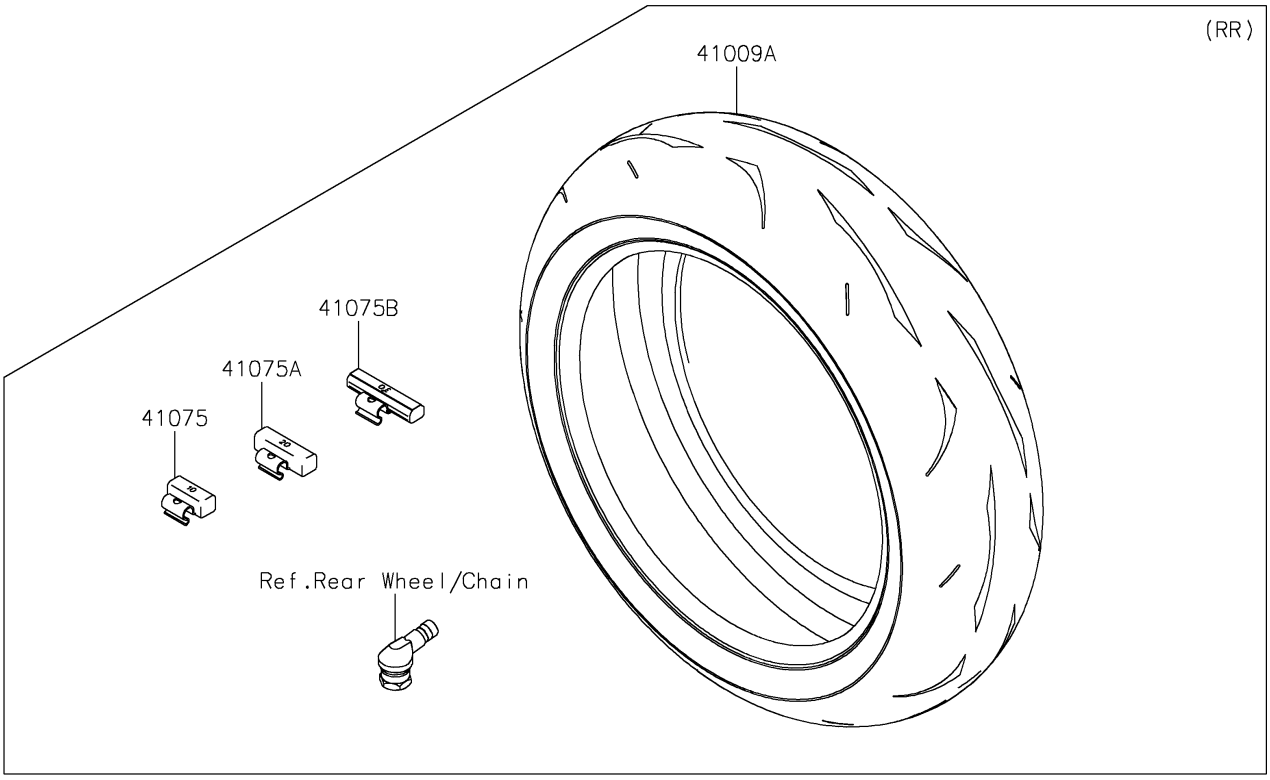

© 2024 Kawasaki Motors Corp., U.S.A.

2022 NINJA® ZX™-10R PARTS LIST

Tires

ITEM NAME	PART NUMBER	QUANTITY
TIRE,FR,120/70ZR17(58W),RS11F (Ref # 41009)	41009-0860	1
TIRE,RR,190/55ZR17(75W),RS11R (Ref # 41009A)	41009-0861	1
BALANCER-WHEEL,10G,SILVER (Ref # 41075)	41075-0007	AR
BALANCER-WHEEL,20G,SILVER (Ref # 41075A)	41075-0008	AR
BALANCER-WHEEL,30G,SILVER (Ref # 41075B)	41075-0009	AR

© 2024 Kawasaki Motors Corp., U.S.A.