2021 VERSYS® 1000 SE LT+ PARTS DIAGRAM

Fuel Pump

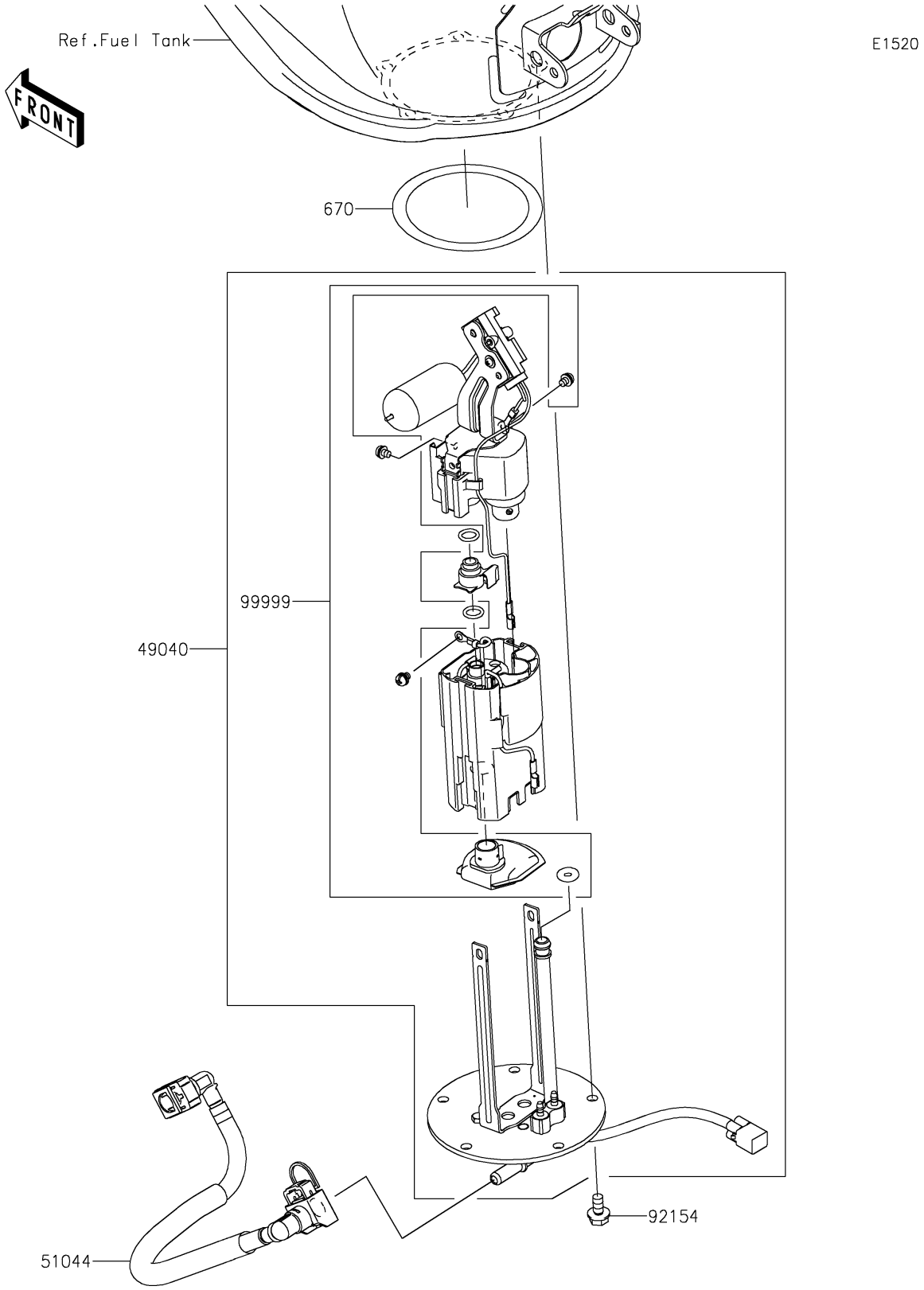

© 2024 Kawasaki Motors Corp., U.S.A.

2021 VERSYS® 1000 SE LT+ PARTS LIST

Fuel Pump

ITEM NAME	PART NUMBER	QUANTITY
PUMP-FUEL (Ref # 49040)	49040-0709	1
TUBE-ASSY,FUEL (Ref # 51044)	51044-0899	1
BOLT,FLANGED,6X12 (Ref # 92154)	92154-1848	5
KIT,FUEL FILTER (Ref # 99999)	99999-0522	1
O RING (Ref # 670)	670E5075	1

© 2024 Kawasaki Motors Corp., U.S.A.