# 2022 NINJA® 400 PARTS DIAGRAM

## Owner's Tools

F2810

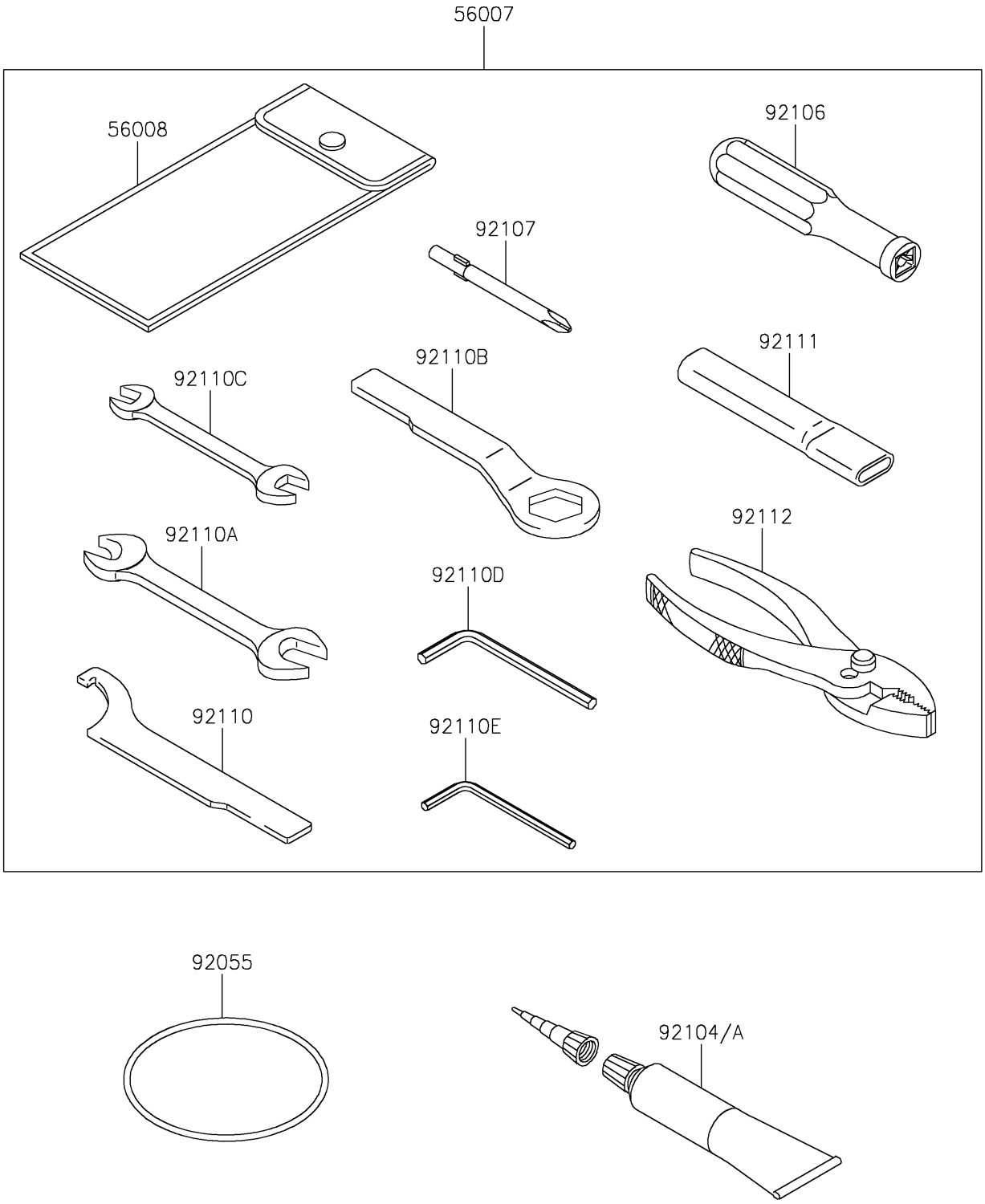


© 2024 Kawasaki Motors Corp., U.S.A.

# 2022 NINJA® 400 PARTS LIST

Owner's Tools

| ITEM NAME | PART NUMBER | QUANTITY |
|---|---|---|
| TOOL-KIT (Ref # 56007) | 56007-0107 | 1 |
| BAG,TOOL (Ref # 56008) | 56008-0036 | 1 |
| RING-O,90MM (Ref # 92055) | 92055-0955 | 1 |
| GASKET-LIQUID,TB1211F,CLEAR (Ref # 92104) | 92104-0004 | 1 |
| GASKET-LIQUID,TB1216B,BLACK (Ref # 92104A) | 92104-1064 | 1 |
| GRIP-SCREW DRIVER (Ref # 92106) | 92106-0004 | 1 |
| TOOL-DRIVER,#2PHILLIPS (Ref # 92107) | 92107-0020 | 1 |
| TOOL-WRENCH,HOOK (Ref # 92110) | 92110-0040 | 1 |
| TOOL-WRENCH,OPEN END,14X17 (Ref # 92110A) | 92110-0057 | 1 |
| TOOL-WRENCH,BOX END,24MM (Ref # 92110B) | 92110-0066 | 1 |
| TOOL-WRENCH,OPEN END,10X12 (Ref # 92110C) | 92110-0564 | 1 |
| TOOL-WRENCH,ALLEN,5MM (Ref # 92110D) | 92110-0566 | 1 |
| TOOL-WRENCH,ALLEN,4MM (Ref # 92110E) | 92110-0567 | 1 |
| TOOL-BAR,WRENCH (Ref # 92111) | 92111-0008 | 1 |
| TOOL-PLIERS (Ref # 92112) | 92112-0007 | 1 |

© 2024 Kawasaki Motors Corp., U.S.A.