2022 NINJA® 400 PARTS DIAGRAM

Engine Mount

F2122

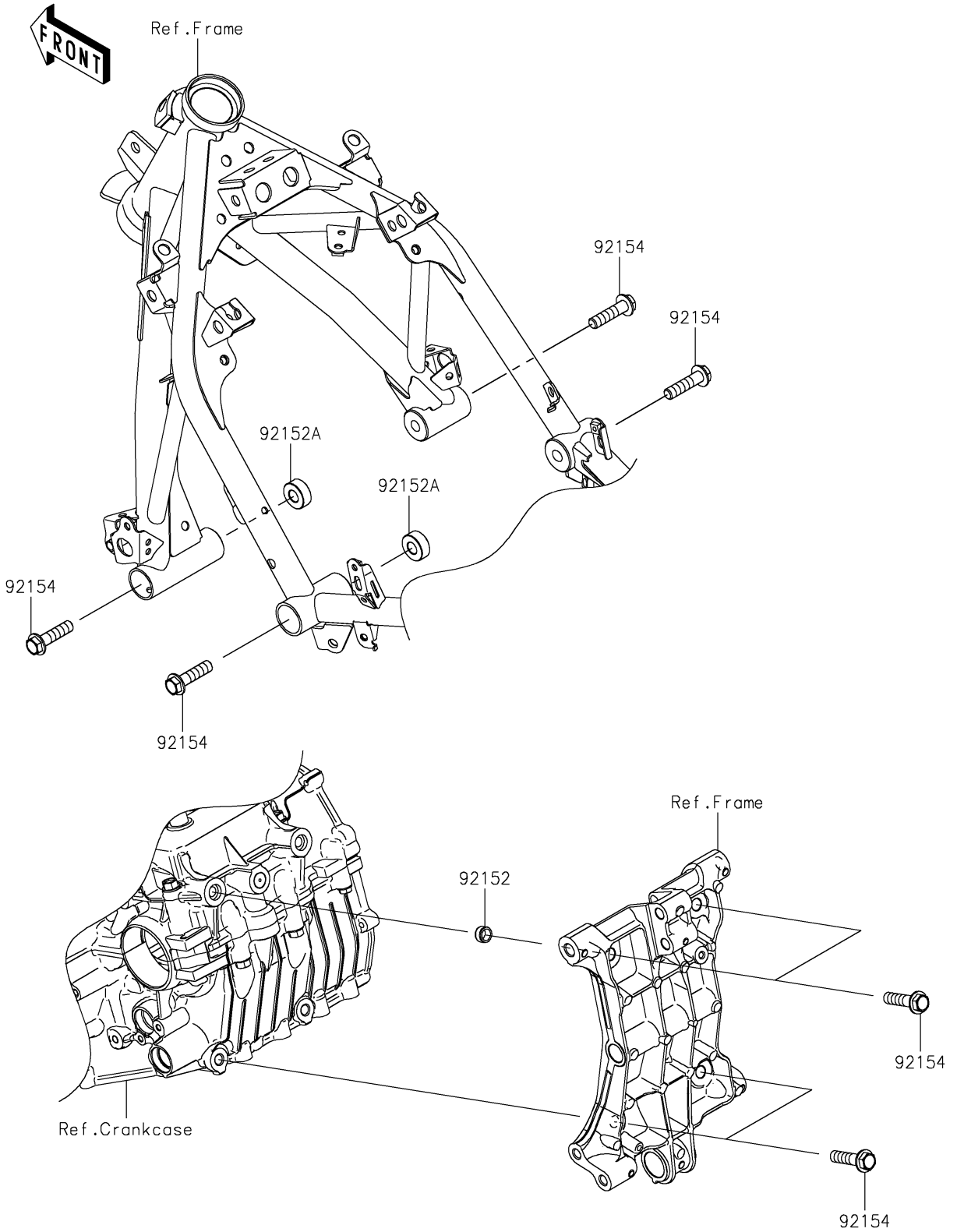

© 2024 Kawasaki Motors Corp., U.S.A.

2022 NINJA® 400 PARTS LIST

Engine Mount

ITEM NAME	PART NUMBER	QUANTITY
COLLAR,DOWEL PIN (Ref # 92152)	92152-0679	2
COLLAR,11X25X10 (Ref # 92152A)	92152-2397	2
BOLT,FLANGED,10X40 (Ref # 92154)	92154-2812	8

© 2024 Kawasaki Motors Corp., U.S.A.