2022 Z400 PARTS DIAGRAM

Engine Cover(s)

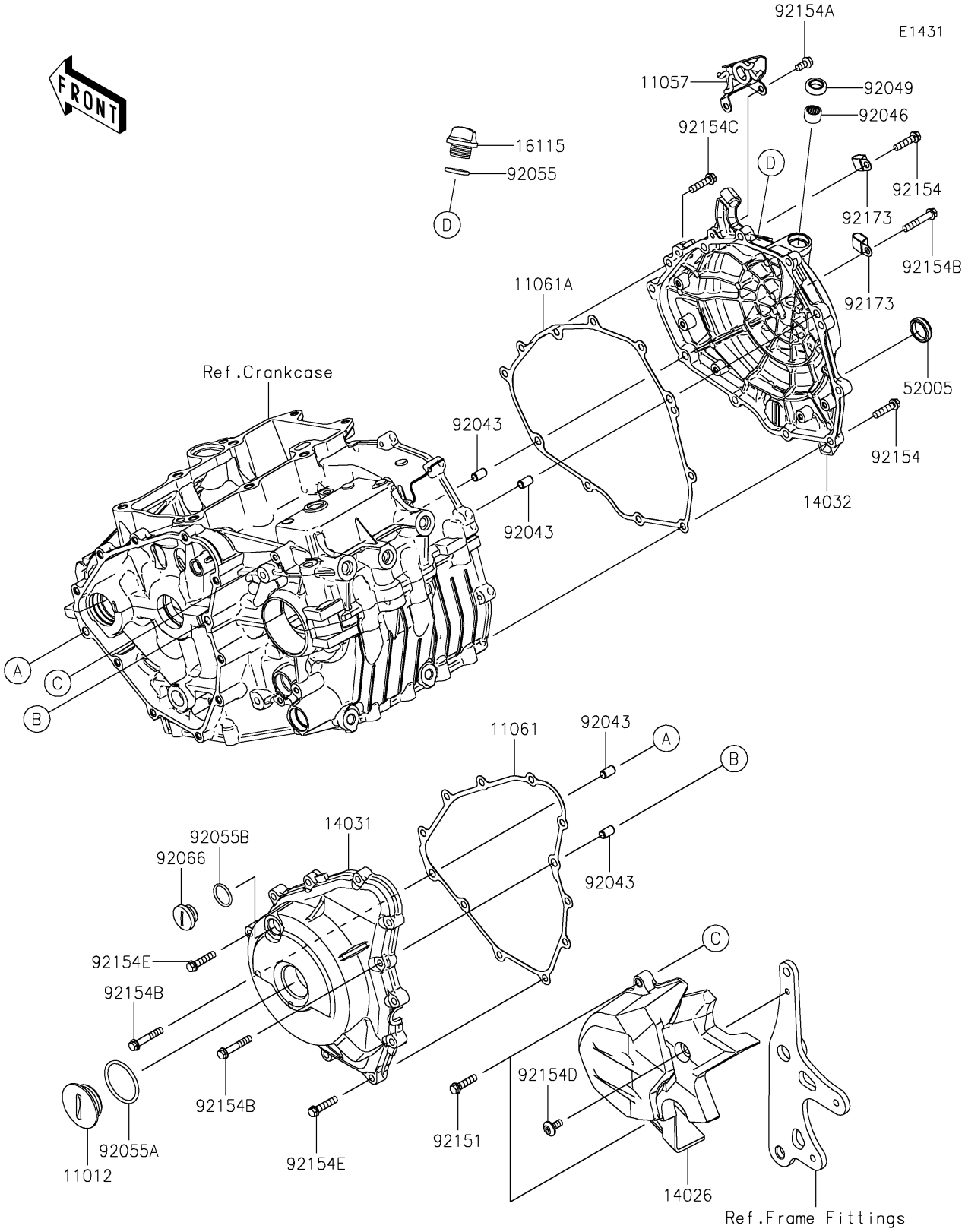

© 2024 Kawasaki Motors Corp., U.S.A.

2022 Z400 PARTS LIST

Engine Cover(s)

ITEM NAME	PART NUMBER	QUANTITY

© 2024 Kawasaki Motors Corp., U.S.A.