1994 KX500 PARTS DIAGRAM

Front Hub(KX500-E6/E7/E8)

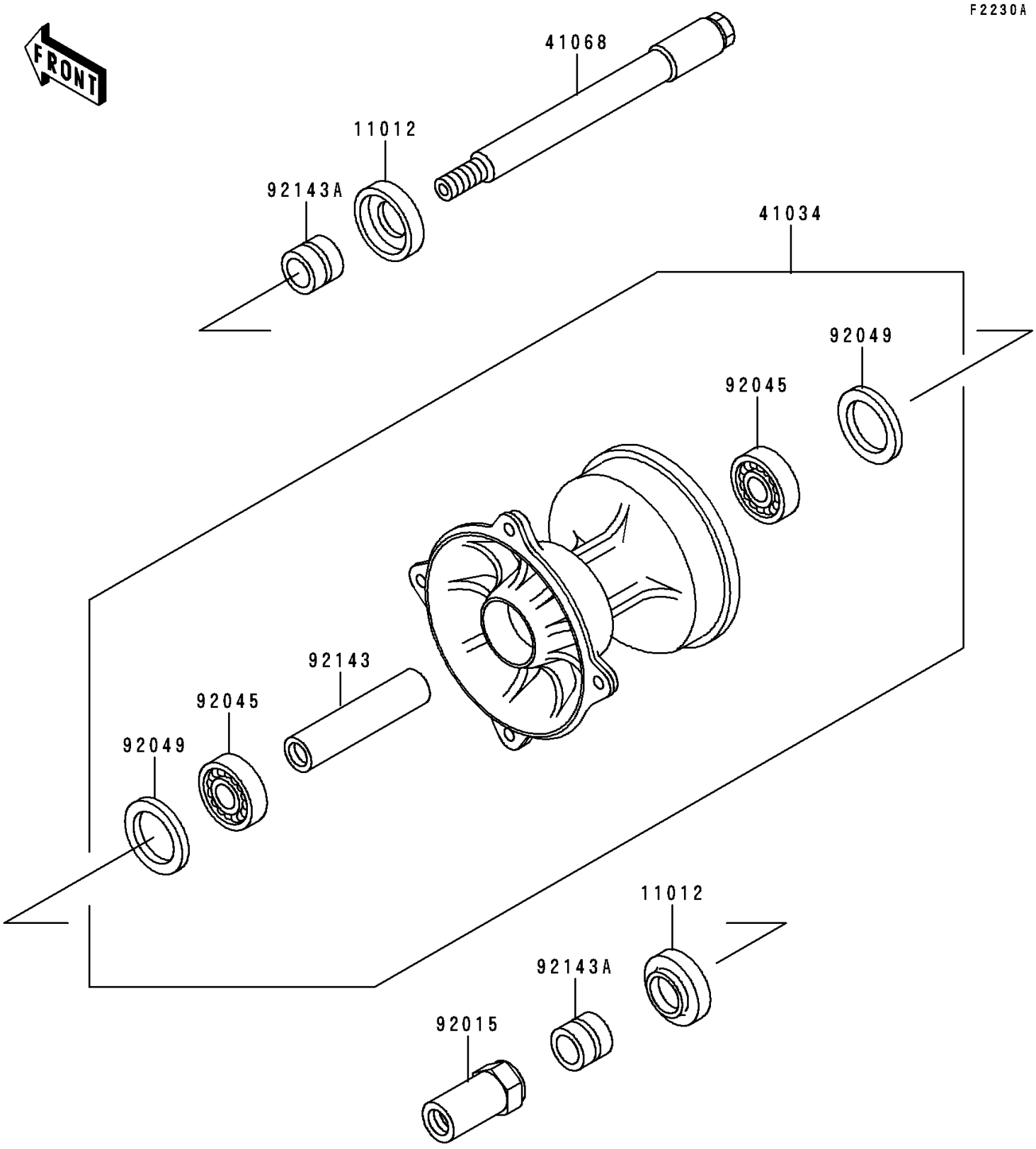

© 2024 Kawasaki Motors Corp., U.S.A.

1994 KX500 PARTS LIST

Front Hub(KX500-E6/E7/E8)

ITEM NAME	PART NUMBER	QUANTITY
CAP,AXLE (Ref # 11012)	11012-1581	2
DRUM-ASSY,FRONT BRAKE (Ref # 41034)	41034-1226	1
AXLE,FR (Ref # 41068)	41068-1342	1
NUT,AXLE,18MM (Ref # 92015)	92015-1884	1
BEARING-BALL,69042RS (Ref # 92045)	92045-1284	2
SEAL-OIL,BJNC-2 25X37X5 (Ref # 92049)	92049-1403	2
COLLAR,FR BRAKE DRUM,L=72 (Ref # 92143)	92143-1580	1
COLLAR,FR AXLE,L=20 (Ref # 92143A)	92143-1581	2

© 2024 Kawasaki Motors Corp., U.S.A.