2022 MULE PRO-FXT™ EPS CAMO PARTS DIAGRAM

Shock Absorber(s)

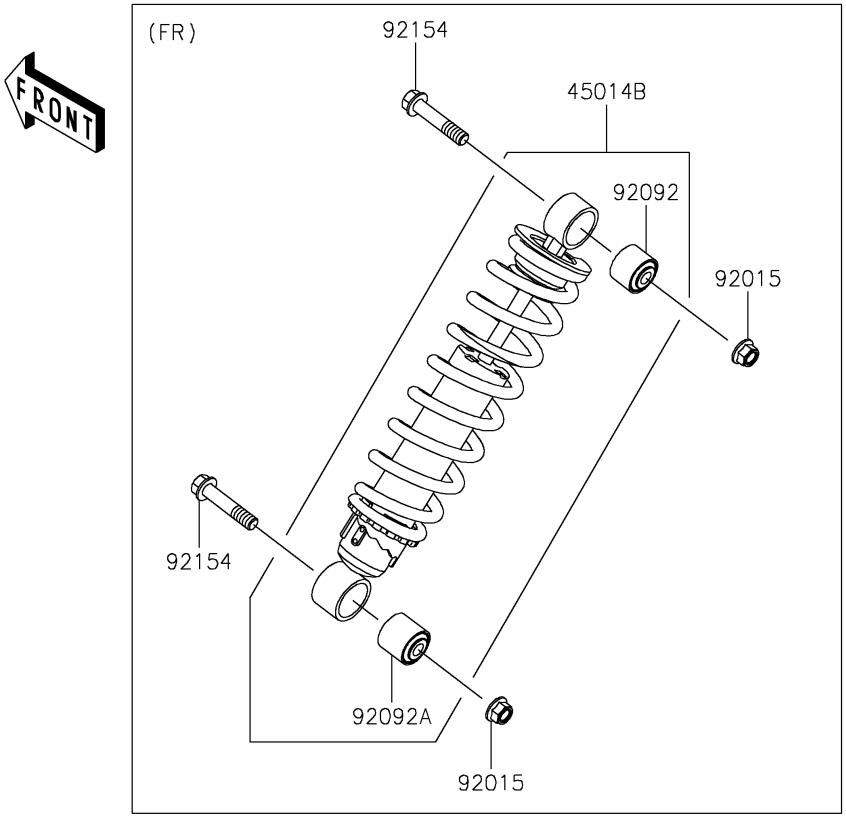

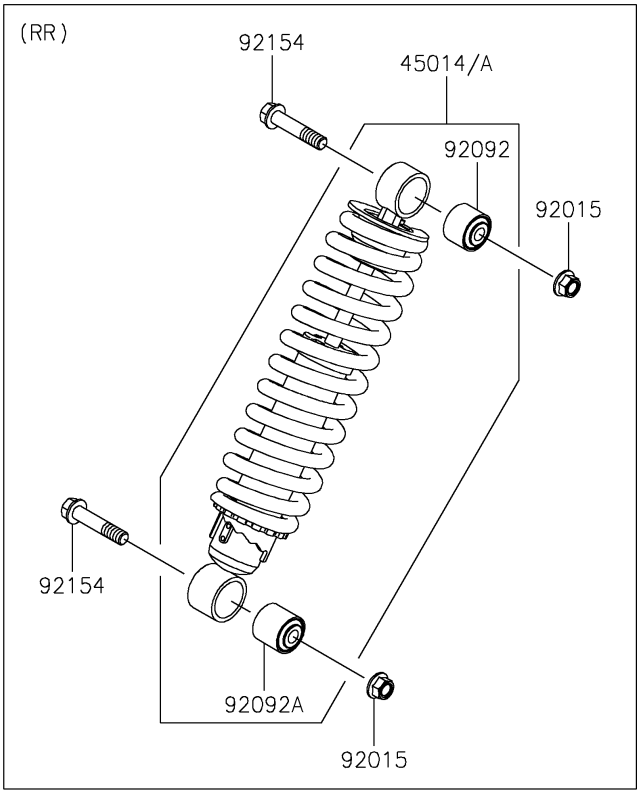

© 2024 Kawasaki Motors Corp., U.S.A.

2022 MULE PRO-FXT™ EPS CAMO PARTS LIST

Shock Absorber(s)

ITEM NAME	PART NUMBER	QUANTITY
SHOCKABSORBER,RR (Ref # 45014)	45014-0537	2
SHOCKABSORBER,RR (Ref # 45014A)	45014-0538	2
SHOCKABSORBER,FR (Ref # 45014B)	45014-0558	2
NUT,LOCK,FLANGED,12MM (Ref # 92015)	92015-1433	8
BUSHING-RUBBER,UPP (Ref # 92092)	92092-0034	4
BUSHING-RUBBER,LWR (Ref # 92092A)	92092-0035	4
BOLT,FLANGED,12X58 (Ref # 92154)	92154-1319	8

© 2024 Kawasaki Motors Corp., U.S.A.