2021 MULE PRO-FX™ EPS PARTS DIAGRAM

Brake Pedal/Throttle Lever

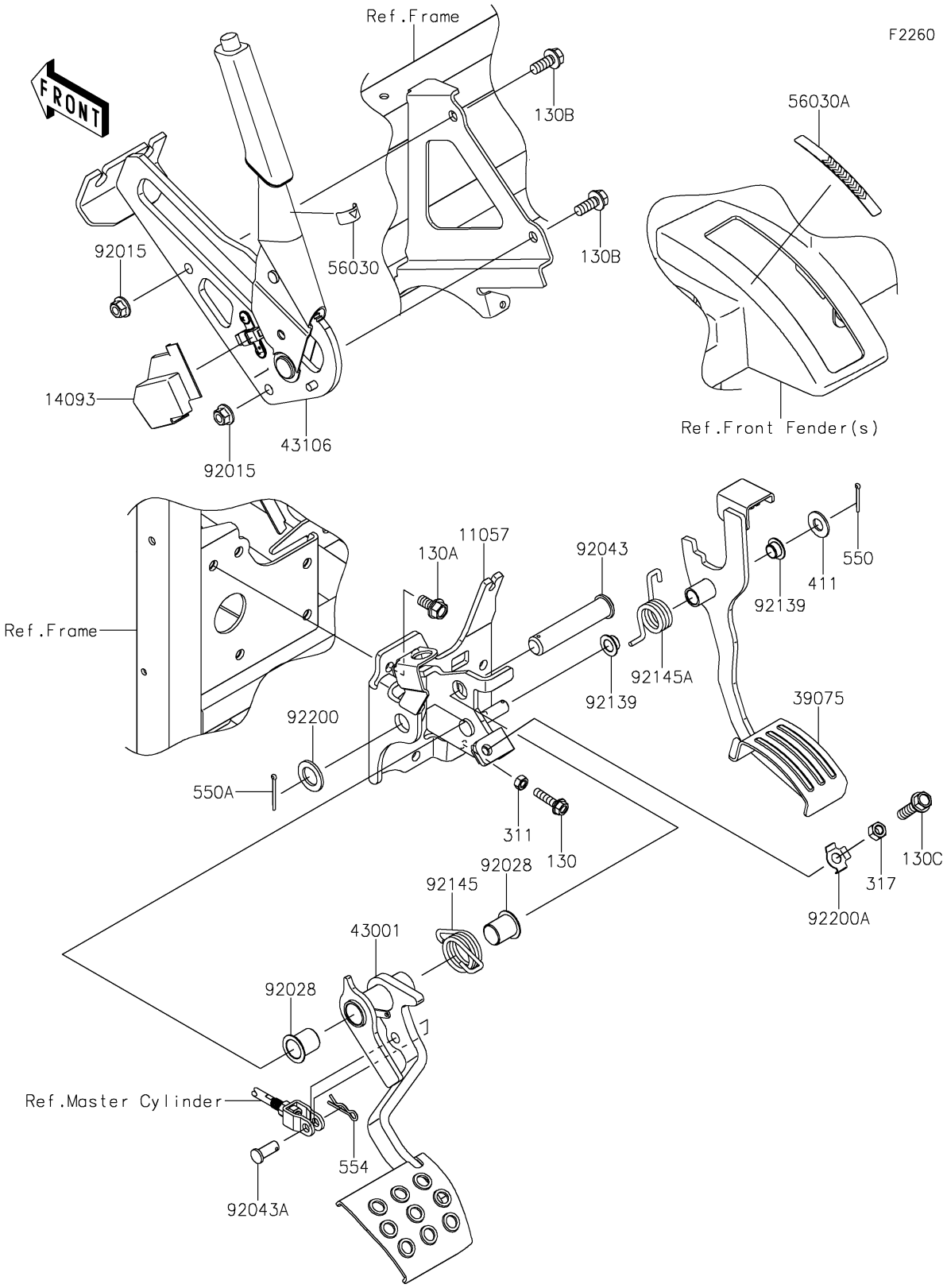

© 2024 Kawasaki Motors Corp., U.S.A.

2021 MULE PRO-FX™ EPS PARTS LIST

Brake Pedal/Throttle Lever

ITEM NAME	PART NUMBER	QUANTITY
BRACKET,PARKING BRAKE (Ref # 11057)	11057-0727	1
COVER,PARKING BRAKE SW. (Ref # 14093)	14093-0241	1
LEVER-THROTTLE (Ref # 39075)	39075-0023	1
LEVER-BRAKE,FOOT (Ref # 43001)	43001-0752	1
LEVER-ASSY-PARKING BRAKE (Ref # 43106)	43106-0006	1
LABEL,ARROW (Ref # 56030)	56030-0905	1
LABEL,STROKE RANGE (Ref # 56030A)	56030-0930	1
NUT,FLANGED,8MM (Ref # 92015)	92015-1406	2
BUSHING (Ref # 92028)	92028-1571	2
PIN,16X78 (Ref # 92043)	92043-0917	1
PIN (Ref # 92043A)	92043-1039	1
BUSHING (Ref # 92139)	92139-0230	2
SPRING,BRAKE PEDAL RETURN (Ref # 92145)	92145-1615	1
SPRING,22X3.5 (Ref # 92145A)	92145-1767	1
WASHER,16X26X2.3 (Ref # 92200)	92200-0043	1
WASHER,8.5X17X0.8 (Ref # 92200A)	92200-0993	1
BOLT-FLANGED,6X25 (Ref # 130)	130BA0625	1
BOLT-FLANGED,8X18 (Ref # 130A)	130BA0818	5
BOLT-FLANGED,8X20 (Ref # 130B)	130BA0820	2
BOLT-FLANGED,8X30 (Ref # 130C)	130BA0830	1
NUT-HEX,6MM (Ref # 311)	311BA0600	1
NUT-HEX-SMALL,8MM (Ref # 317)	317BA0800	1
WASHER-PLAIN,10MM (Ref # 411)	411AA1000	1
PIN-COTTER,2.5X18 (Ref # 550)	550AA2518	1
PIN-COTTER,2.5X25 (Ref # 550A)	550AA2525	1
PIN-SNAP,10MM (Ref # 554)	554DA1000	1

© 2024 Kawasaki Motors Corp., U.S.A.