2021 MULE PRO-FX™ PARTS DIAGRAM

Frame Fittings(Front)

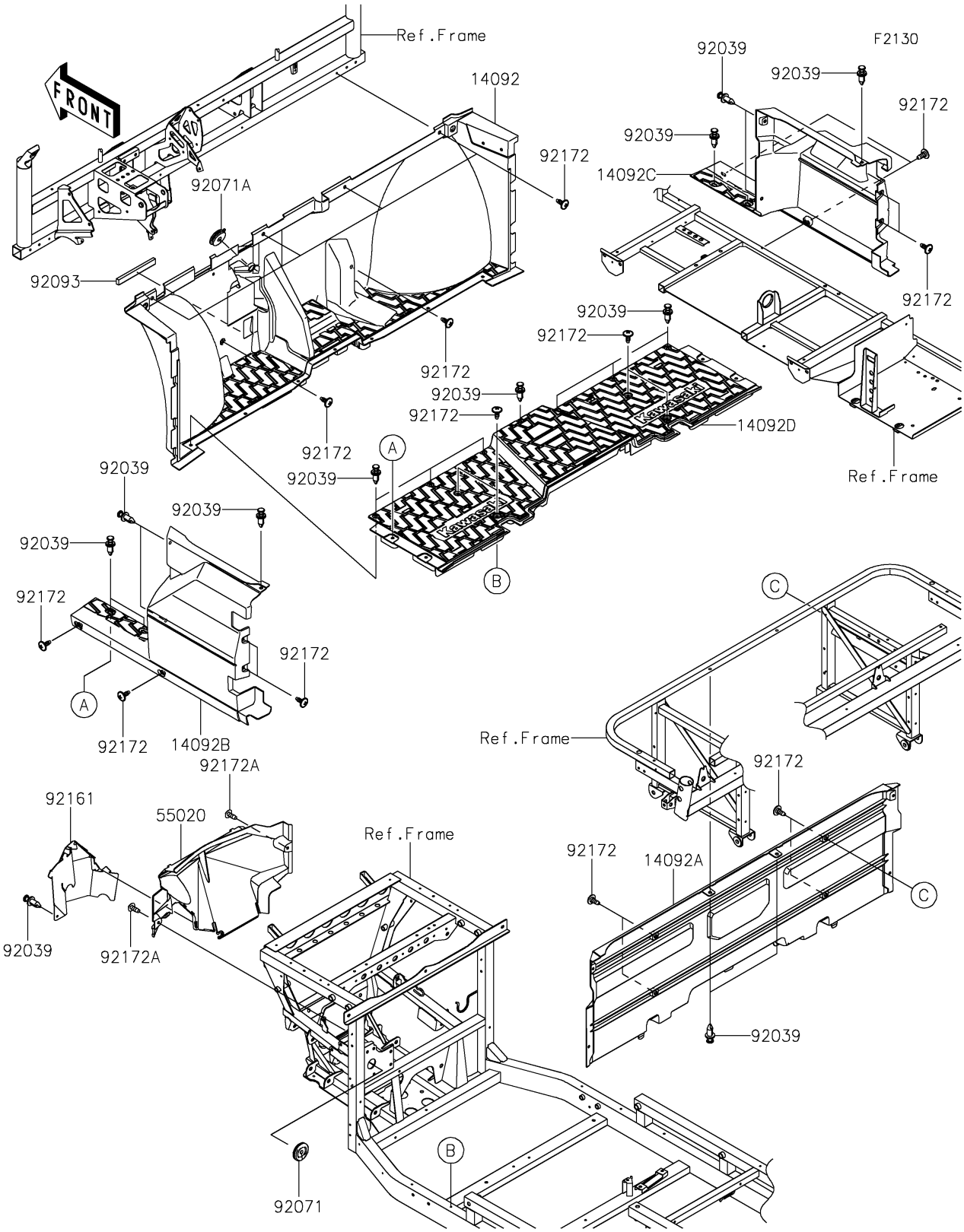

© 2024 Kawasaki Motors Corp., U.S.A.

2021 MULE PRO-FX™ PARTS LIST

Frame Fittings(Front)

ITEM NAME	PART NUMBER	QUANTITY
COVER,FR FLOOR (Ref # 14092)	14092-1184	1
COVER,FR SEAT (Ref # 14092A)	14092-1185	1
COVER,SIDE,LH,FR (Ref # 14092B)	14092-1188	1
COVER,SIDE,RH,FR (Ref # 14092C)	14092-1189	1
COVER,FLOOR,BOTTOM (Ref # 14092D)	14092-1196	1
GUARD (Ref # 55020)	55020-0961	1
RIVET (Ref # 92039)	92039-0776	20
GROMMET,9X45X9 (Ref # 92071)	92071-0728	1
GROMMET,8X22X8 (Ref # 92071A)	92071-0753	1
SEAL,10X20X165 (Ref # 92093)	92093-0617	1
DAMPER (Ref # 92161)	92161-1649	1
SCREW,6X16 (Ref # 92172)	92172-0711	22
SCREW,TAPPING,6X16 (Ref # 92172A)	92172-0739	2

© 2024 Kawasaki Motors Corp., U.S.A.