1989 KX500

PARTS DIAGRAM

Crankshaft/Piston

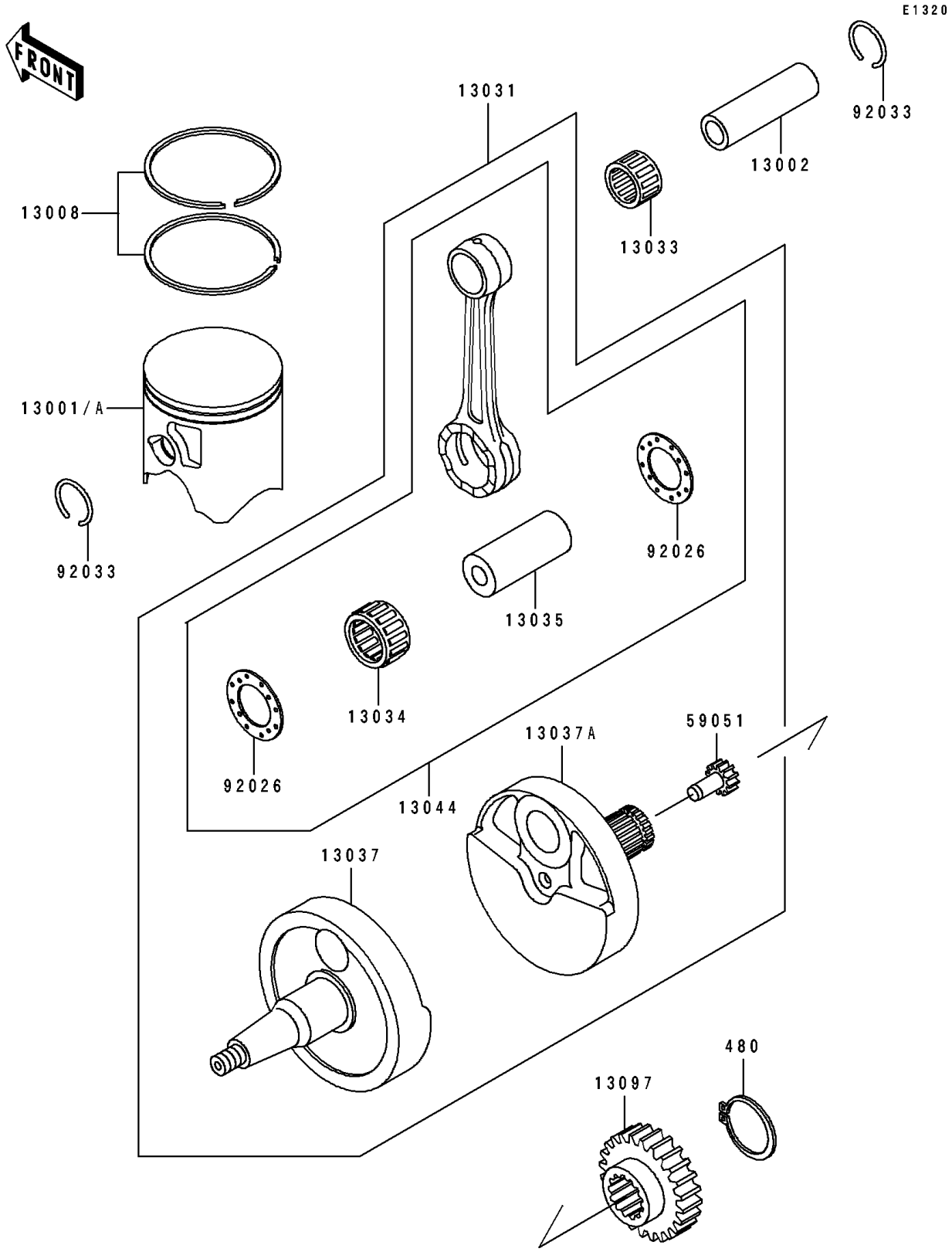

© 2026 Kawasaki Motors Corp., U.S.A.

1989 KX500

PARTS LIST

Crankshaft/Piston

ITEM NAME	PART NUMBER	QUANTITY
PISTON-ENGINE (Ref # 13001)	13001-1298	1
PIN-PISTON (Ref # 13002)	13002-1067	1
RING-SET-PISTON (Ref # 13008)	13008-1103	1
CRANKSHAFT-COMP (Ref # 13031)	13031-1285	1
BEARING-SMALL END,KTV192425 (Ref # 13033)	13033-1055	1
BEARING-BIG END (Ref # 13034)	13034-1083	1
PIN-CRANK (Ref # 13035)	13035-1008	1
CRANKSHAFT,LH (Ref # 13037)	13037-1358	1
CRANKSHAFT,RH (Ref # 13037A)	13037-1359	1
SET-CONNECTING ROD (Ref # 13044)	13044-5076	1
GEAR-PRIMARY SPUR,26T (Ref # 13097)	13097-1205	1
GEAR-SPUR,WATER PUMP,13T (Ref # 59051)	59051-1128	1
SPACER,26X44X1.0 (Ref # 92026)	92026-1346	2
RING-SNAP,PISTON PIN (Ref # 92033)	92036-008	2
CIRCLIP-TYPE-C,24MM (Ref # 480)	480J2400	1

© 2026 Kawasaki Motors Corp., U.S.A.