1988 KX500 PARTS DIAGRAM

Side Covers

F2611-0019

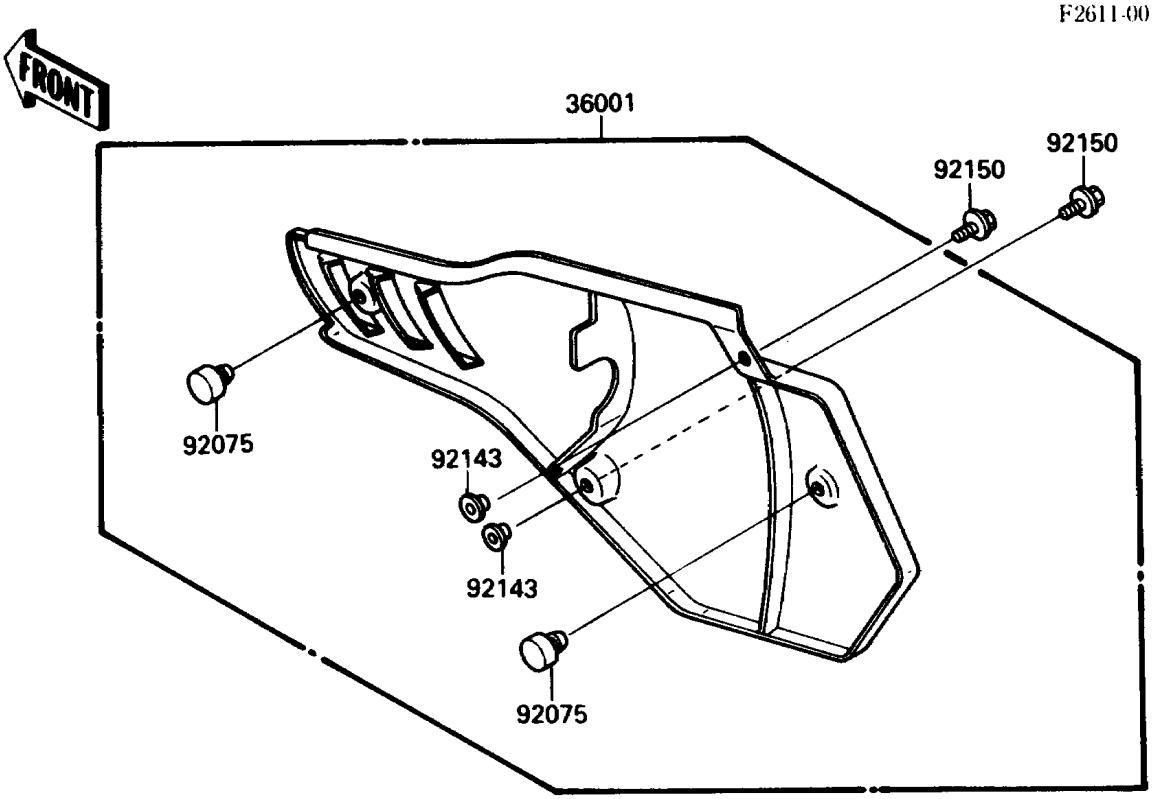

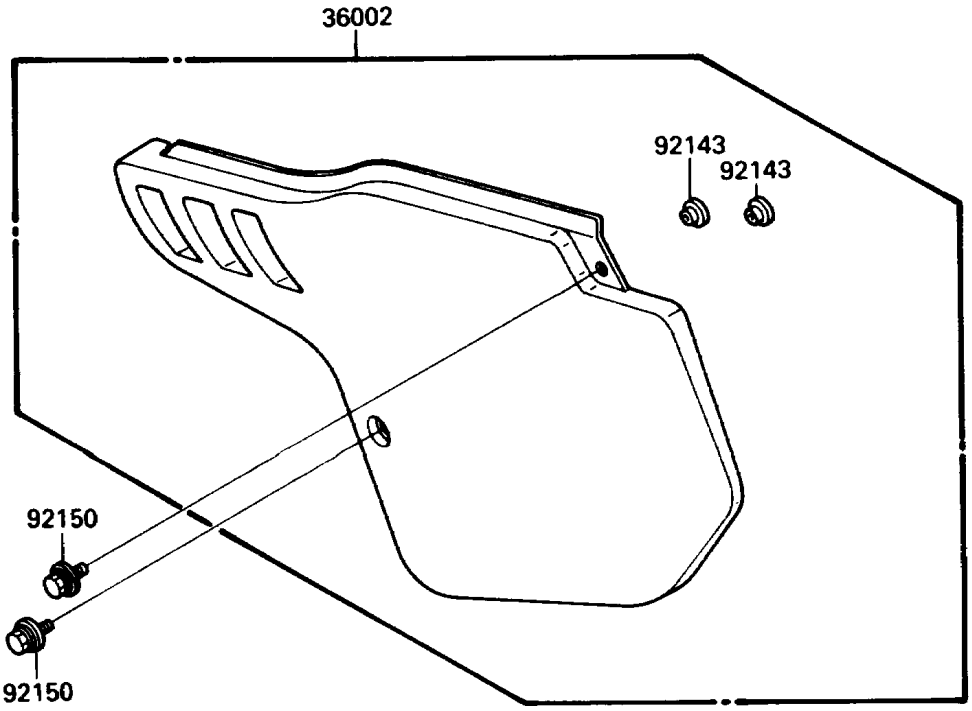

© 2024 Kawasaki Motors Corp., U.S.A.

1988 KX500 PARTS LIST

Side Covers

ITEM NAME	PART NUMBER	QUANTITY
COVER-SIDE,RH,GREEN/WHITE (Ref # 36001)	36001-1376-AC	1
COVER-SIDE,LH,L.GREEN (Ref # 36002)	36002-5451-6W	1
DAMPER (Ref # 92075)	92075-1598	2
COLLAR (Ref # 92143)	92143-1196	4
BOLT,FLANGED,6X20 (Ref # 92150)	92150-1131	4

© 2024 Kawasaki Motors Corp., U.S.A.