2019 VERSYS® 1000 SE LT+ PARTS DIAGRAM

Accessory(Decals)

F2910F

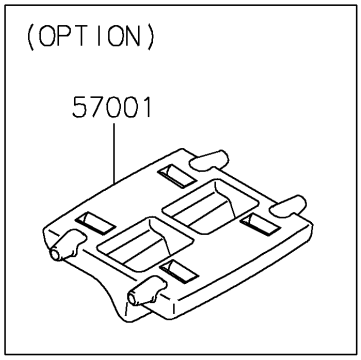

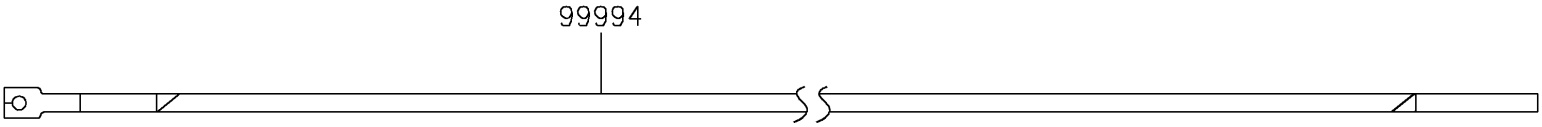

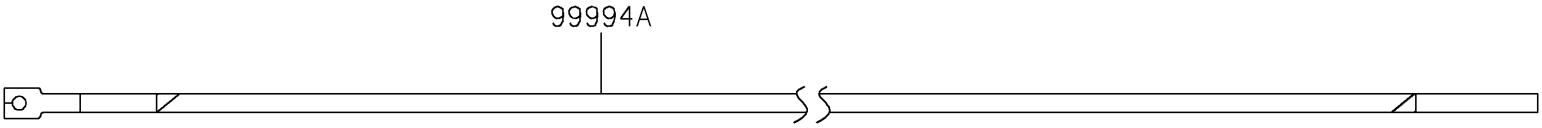

© 2024 Kawasaki Motors Corp., U.S.A.

2019 VERSYS® 1000 SE LT+ PARTS LIST

Accessory(Decals)

ITEM NAME	PART NUMBER	QUANTITY
RIM STRIPE APPLICATOR (Ref # 57001)	57001-1752	AR
WHEEL RIM TAPE,GREEN (Ref # 99994)	99994-0932	1
WHEEL RIM TAPE,SILVER (Ref # 99994A)	99994-0933	1

© 2024 Kawasaki Motors Corp., U.S.A.