2021 MULE PRO-FX™ EPS LE PARTS DIAGRAM

Rear Brake

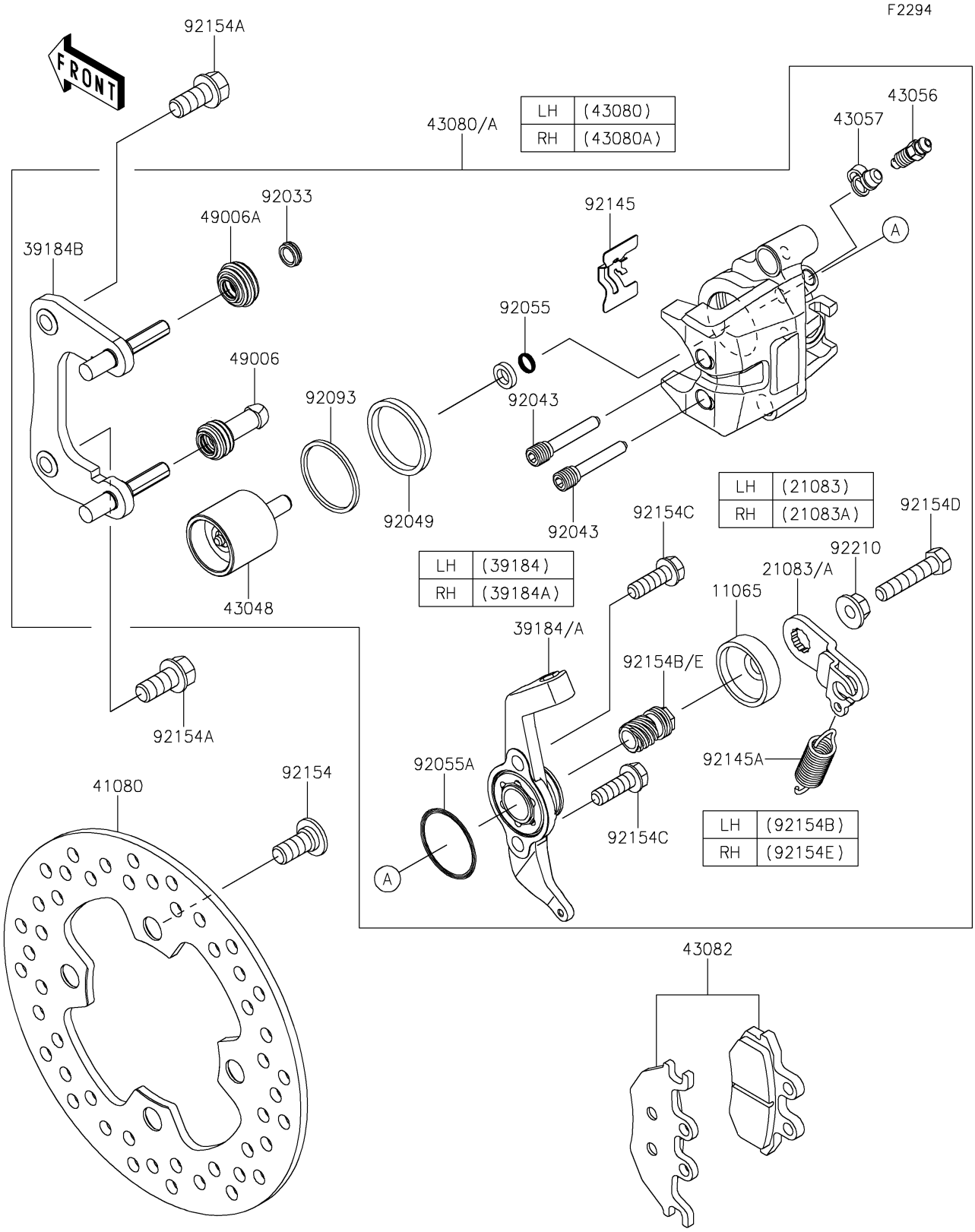

© 2024 Kawasaki Motors Corp., U.S.A.

2021 MULE PRO-FX™ EPS LE PARTS LIST

Rear Brake

ITEM NAME	PART NUMBER	QUANTITY
CAP (Ref # 11065)	11065-0870	2
ARM,BRAKE,RR,LH (Ref # 21083)	21083-0728	1
ARM,BRAKE,RR,RH (Ref # 21083A)	21083-0729	1
BRACKET-ASSY,LH (Ref # 39184)	39184-0042	1
BRACKET-ASSY,RH (Ref # 39184A)	39184-0043	1
BRACKET-ASSY (Ref # 39184B)	39184-0044	2
DISC (Ref # 41080)	41080-0608	2
PISTON-CALIPER (Ref # 43048)	43048-0027	2
BREATHER-BRAKE (Ref # 43056)	43056-0010	2
CAP-BREATHER (Ref # 43057)	43057-0552	2
CALIPER-SUB-ASSY,RR,LH (Ref # 43080)	43080-0163	1
CALIPER-SUB-ASSY,RR,RH (Ref # 43080A)	43080-0164	1
PAD-ASSY-BRAKE (Ref # 43082)	43082-0140	2
BOOT (Ref # 49006)	49006-0591	2
BOOT (Ref # 49006A)	49006-0592	2
RING-SNAP (Ref # 92033)	92033-0749	2
PIN (Ref # 92043)	92043-0818	4
SEAL-OIL (Ref # 92049)	92049-0765	2
RING-O (Ref # 92055)	92055-0793	2
RING-O (Ref # 92055A)	92055-0795	2
SEAL (Ref # 92093)	92093-0613	2
SPRING (Ref # 92145)	92145-1619	2
SPRING,RETURN,47MM (Ref # 92145A)	92145-1690	2
BOLT,SOCKET,10X23 (Ref # 92154)	92154-0713	8
BOLT,FLANGED,10X22 (Ref # 92154A)	92154-1327	4
BOLT,LH (Ref # 92154B)	92154-1479	1
BOLT (Ref # 92154C)	92154-1480	4
BOLT (Ref # 92154D)	92154-1481	2
BOLT,RH (Ref # 92154E)	92154-1503	1

© 2024 Kawasaki Motors Corp., U.S.A.

2021 MULE PRO-FX™ EPS LE PARTS LIST

Rear Brake

ITEM NAME	PART NUMBER	QUANTITY
NUT (Ref # 92210)	92210-0912	2

© 2024 Kawasaki Motors Corp., U.S.A.