2021 Z H2 SE PARTS DIAGRAM

Accessory(Tank Pads and Meter Film)

F2910G

99994

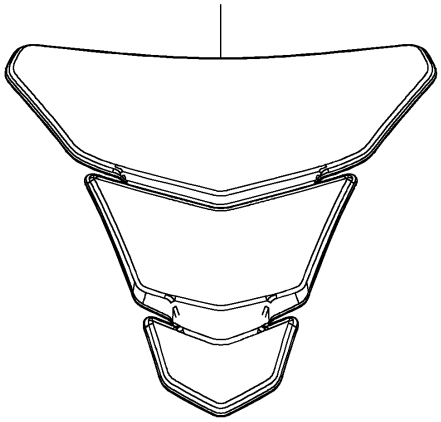

99994A

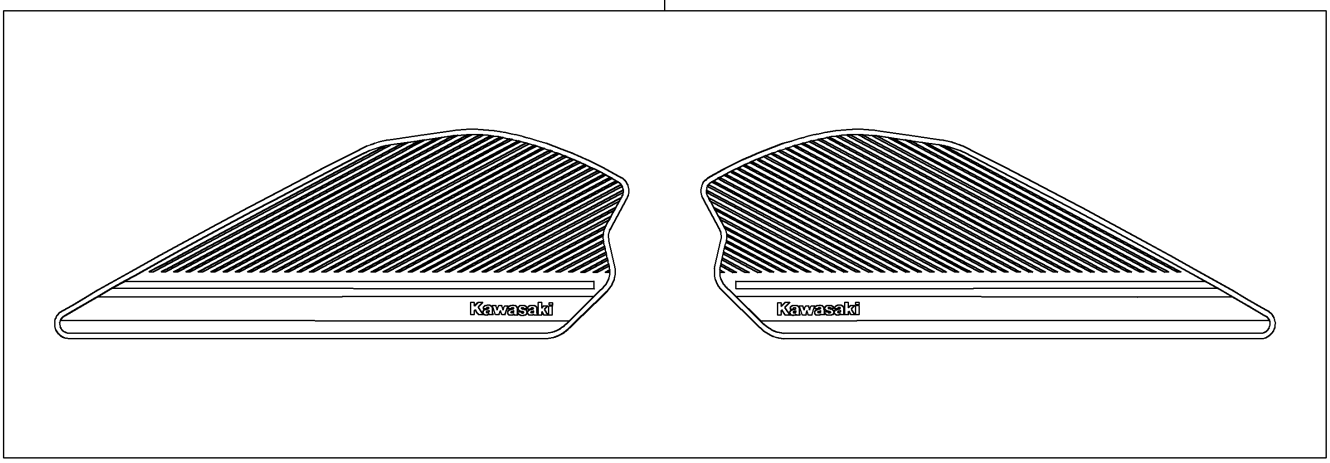

99994B

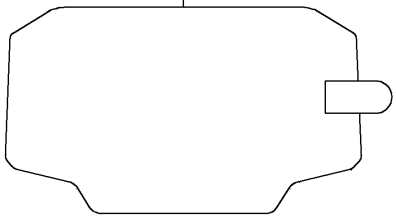

© 2024 Kawasaki Motors Corp., U.S.A.

2021 Z H2 SE PARTS LIST

Accessory(Tank Pads and Meter Film)

ITEM NAME	PART NUMBER	QUANTITY
KIT-ACCESSORY,TANK PAD (Ref # 99994)	99994-1075	1
KNEE PAD (Ref # 99994A)	99994-1435	1
SCRATCH RESISTANT FILM (Ref # 99994B)	99994-1472	1

© 2024 Kawasaki Motors Corp., U.S.A.