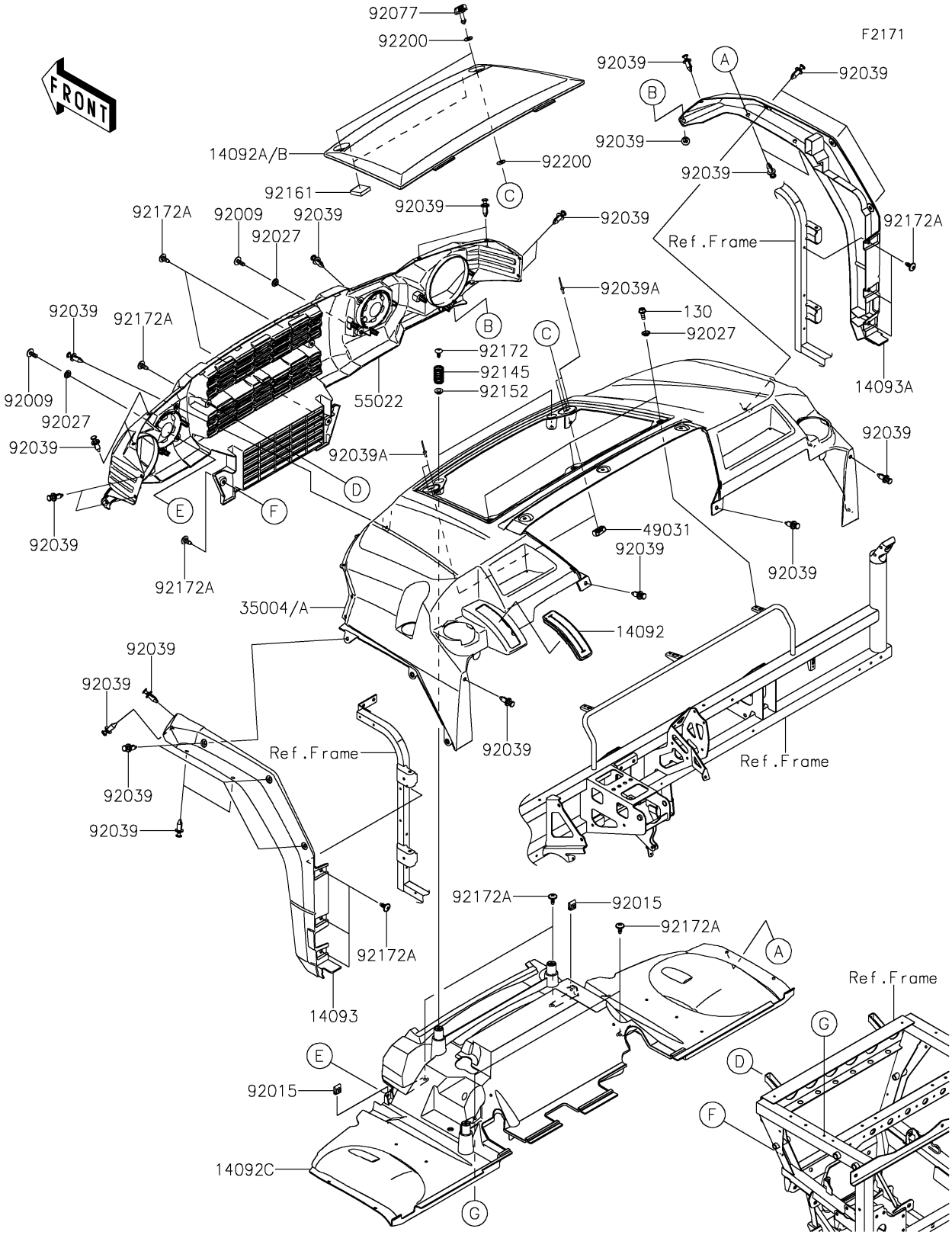
2021 MULE PRO-FX™ EPS PARTS DIAGRAM

Front Fender(s)


F2171
FRONT
92077
92200
14092A/B
92200
92161
92039
92172A
92009
92039
92027
92039
92039
92039

2021 MULE PRO-FX™ EPS PARTS LIST

Front Fender(s)

ITEM NAME	PART NUMBER	QUANTITY
BOLT-FLANGED,6X16 (Ref # 130)	130CA0616	3
COVER,CENTER CONSOLE,TOP (Ref # 14092)	14092-0791	1
COVER,OPEN,B.WHITE (Ref # 14092A)	14092-1177-266	1
COVER,OPEN,T.GREEN (Ref # 14092B)	14092-1177-42S	1
COVER,TOP,FR INNER (Ref # 14092C)	14092-1194	1
COVER,SIDE,LH (Ref # 14093)	14093-0596	1
COVER,SIDE,RH (Ref # 14093A)	14093-0597	1
FENDER-FRONT,B.WHITE (Ref # 35004)	35004-0335-266	1
FENDER-FRONT,T.GREEN (Ref # 35004A)	35004-0335-42S	1
LATCH (Ref # 49031)	49031-0008	2
COVER-HEAD LAMP (Ref # 55022)	55022-0304	1
SCREW,6X16 (Ref # 92009)	92009-1621	2
NUT,CLAMP,6MM (Ref # 92015)	92015-1678	2
COLLAR,L=4.6 (Ref # 92027)	92027-1168	5
RIVET (Ref # 92039)	92039-0776	28
RIVET,3.2X9.5 (Ref # 92039A)	92039-0785	4
KNOB (Ref # 92077)	92077-0030	2
SPRING,17X65 (Ref # 92145)	92145-1727	2
COLLAR (Ref # 92152)	92152-0140	2
DAMPER,40X40X10 (Ref # 92161)	92161-1861	2
SCREW,6X16 (Ref # 92172)	92172-0284	2
SCREW,6X16 (Ref # 92172A)	92172-0711	14
WASHER (Ref # 92200)	92200-0503	4

© 2024 Kawasaki Motors Corp., U.S.A.