2020 Z900RS ABS PARTS DIAGRAM

Engine Mount

F2122

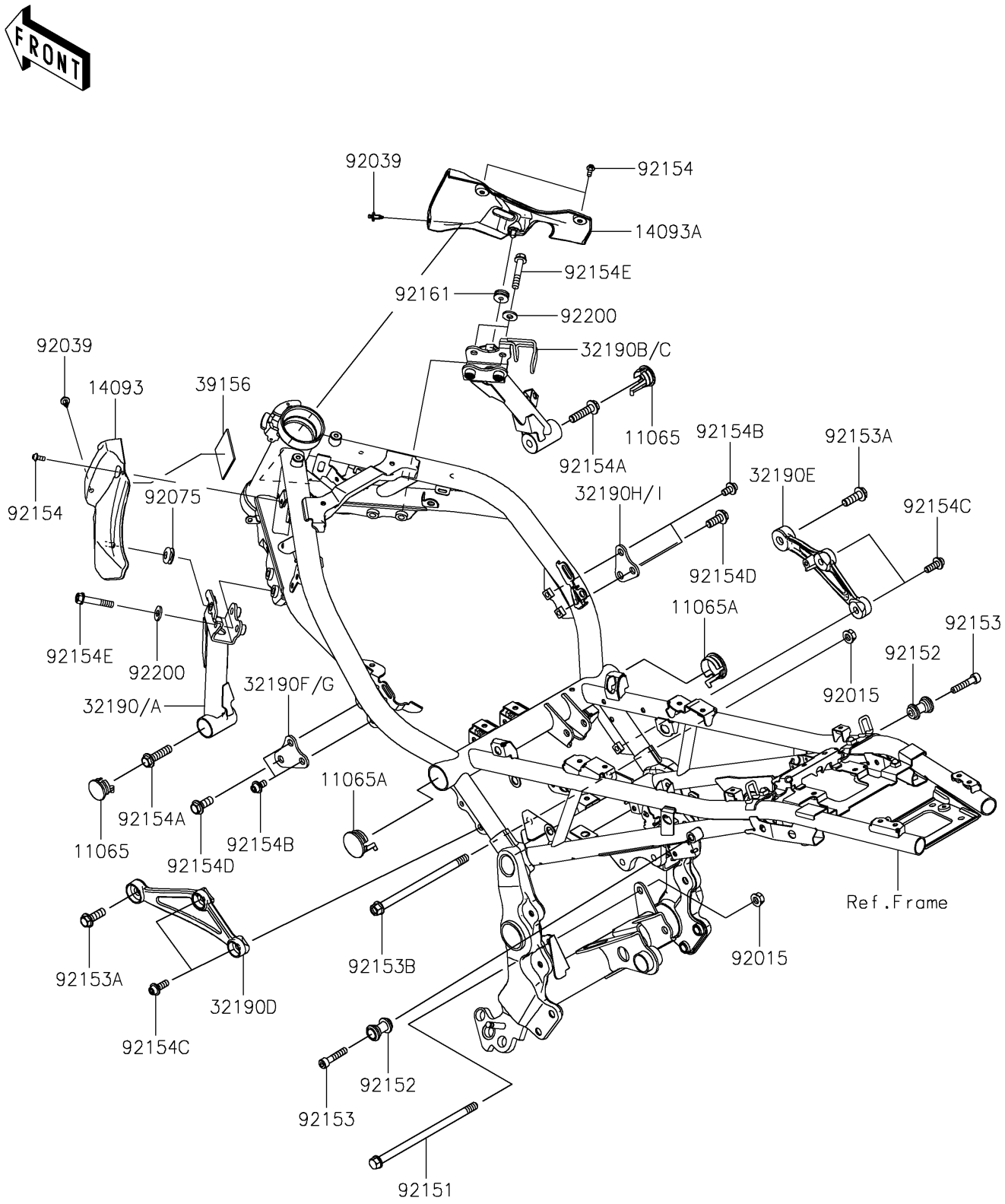

© 2024 Kawasaki Motors Corp., U.S.A.

2020 Z900RS ABS PARTS LIST

Engine Mount

ITEM NAME	PART NUMBER	QUANTITY
CAP,27.4MM (Ref # 11065)	11065-0987	2
CAP,35.1MM (Ref # 11065A)	11065-0988	2
COVER,FRAME,LH (Ref # 14093)	14093-0620	1
COVER,FRAME,RH (Ref # 14093A)	14093-0621	1
BRACKET-ENGINE,LH,BLACK (Ref # 32190)	32190-0744-10	1
BRACKET-ENGINE,RH,BLACK (Ref # 32190B)	32190-0745-10	1
BRACKET-ENGINE,CYL.,LH,F.S.BLK (Ref # 32190D)	32190-0757-18R	1
BRACKET-ENGINE,CYL.,RH,F.S.BLK (Ref # 32190E)	32190-0758-18R	1
BRACKET-ENGINE,HEAD,LH,BLACK (Ref # 32190F)	32190-0759-10	1
BRACKET-ENGINE,HEAD,RH,BLACK (Ref # 32190H)	32190-0760-10	1
PAD,50X50X2 (Ref # 39156)	39156-2235	1
NUT,FLANGED,10MM (Ref # 92015)	92015-1180	2
RIVET (Ref # 92039)	92039-0068	2
DAMPER (Ref # 92075)	92075-1067	1
BOLT,FLANGED,10X190 (Ref # 92151)	92151-1915	1
COLLAR (Ref # 92152)	92152-2403	2
BOLT,SOCKET,8X40 (Ref # 92153)	92153-0517	2
BOLT,FLANGED,10X30 (Ref # 92153A)	92153-0801	2
BOLT,FLANGED,10X170 (Ref # 92153B)	92153-1428	1
BOLT,SOCKET,5X12 (Ref # 92154)	92154-0917	3
BOLT,FLANGED,10X40 (Ref # 92154A)	92154-2743	2
BOLT,SOCKET,8X14 (Ref # 92154B)	92154-2745	4
BOLT,SOCKET,8X22 (Ref # 92154C)	92154-2746	4
BOLT,FLANGED,10X25 (Ref # 92154D)	92154-2747	2
BOLT,FLANGED,8X45 (Ref # 92154E)	92154-3733	4
DAMPER,6X20X7.5 (Ref # 92161)	92161-1991	1
WASHER,8.5X18X2.3 (Ref # 92200)	92200-1213	4

© 2024 Kawasaki Motors Corp., U.S.A.