# 2021 KX™250 PARTS DIAGRAM

## Footrests

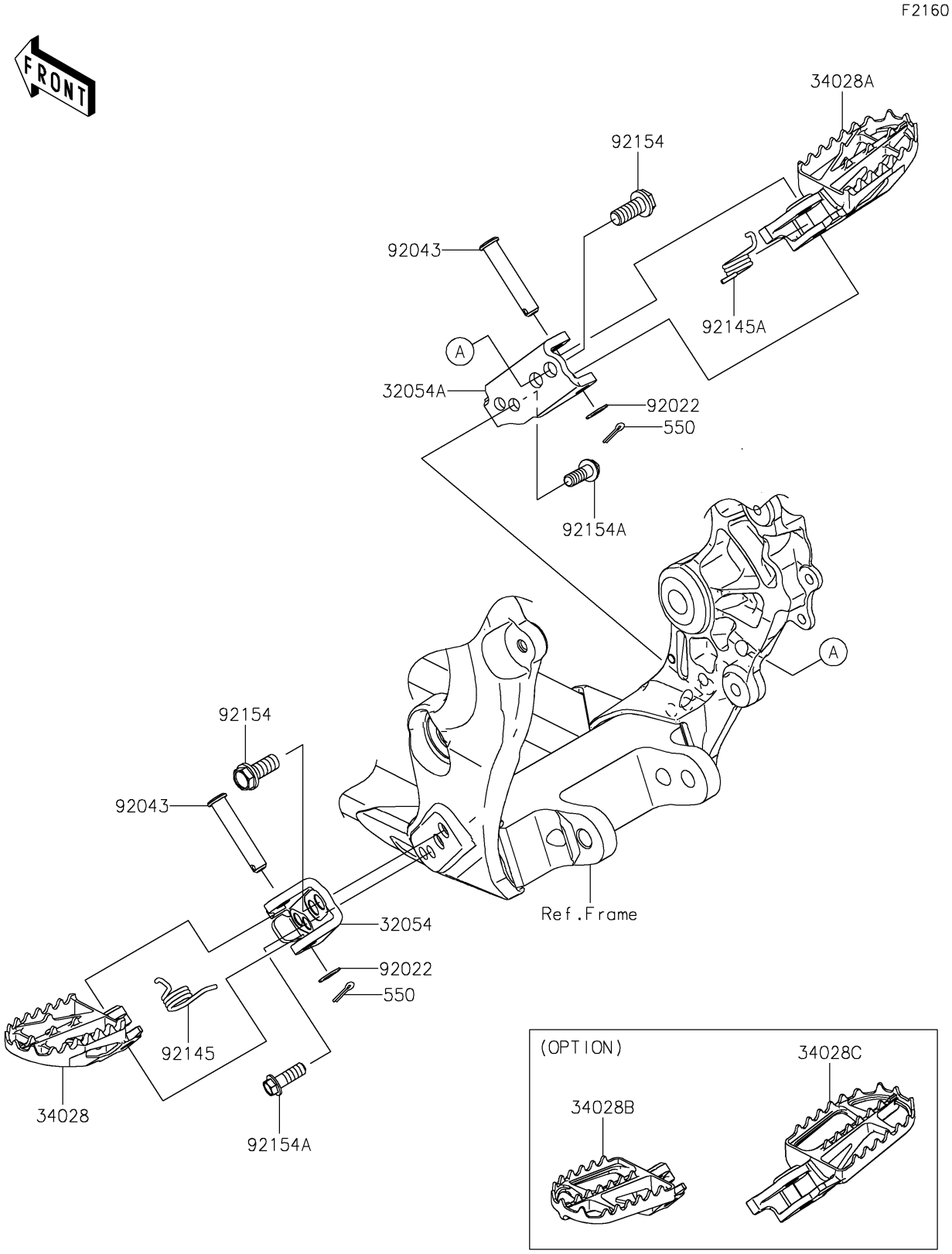


© 2024 Kawasaki Motors Corp., U.S.A.

# 2021 KX™250 PARTS LIST

Footrests

| ITEM NAME | PART NUMBER | QUANTITY |
|---|---|---|
| BRACKET-STEP,LH (Ref # 32054) | 32054-0054 | 1 |
| BRACKET-STEP,RH (Ref # 32054A) | 32054-0055 | 1 |
| STEP,LH (Ref # 34028) | 34028-0104 | 1 |
| STEP,RH (Ref # 34028A) | 34028-0105 | 1 |
| STEP,WIDE,LH (Ref # 34028B) | 34028-0360 | 1 |
| STEP,WIDE,RH (Ref # 34028C) | 34028-0361 | 1 |
| WASHER,10.2X16X1 (Ref # 92022) | 92022-1829 | 2 |
| PIN,10X42.5 (Ref # 92043) | 92043-0074 | 2 |
| SPRING,STEP,LH (Ref # 92145) | 92145-0819 | 1 |
| SPRING,STEP,RH (Ref # 92145A) | 92145-0820 | 1 |
| BOLT,FLANGED,10X23 (Ref # 92154) | 92154-0545 | 2 |
| BOLT,8X23,MEC (Ref # 92154A) | 92154-2987 | 2 |
| PIN-COTTER,3.0X20 (Ref # 550) | 550S3020 | 2 |

© 2024 Kawasaki Motors Corp., U.S.A.