2021 KX™250 PARTS DIAGRAM

Gear Change Drum/Shift Fork(s)

E1362

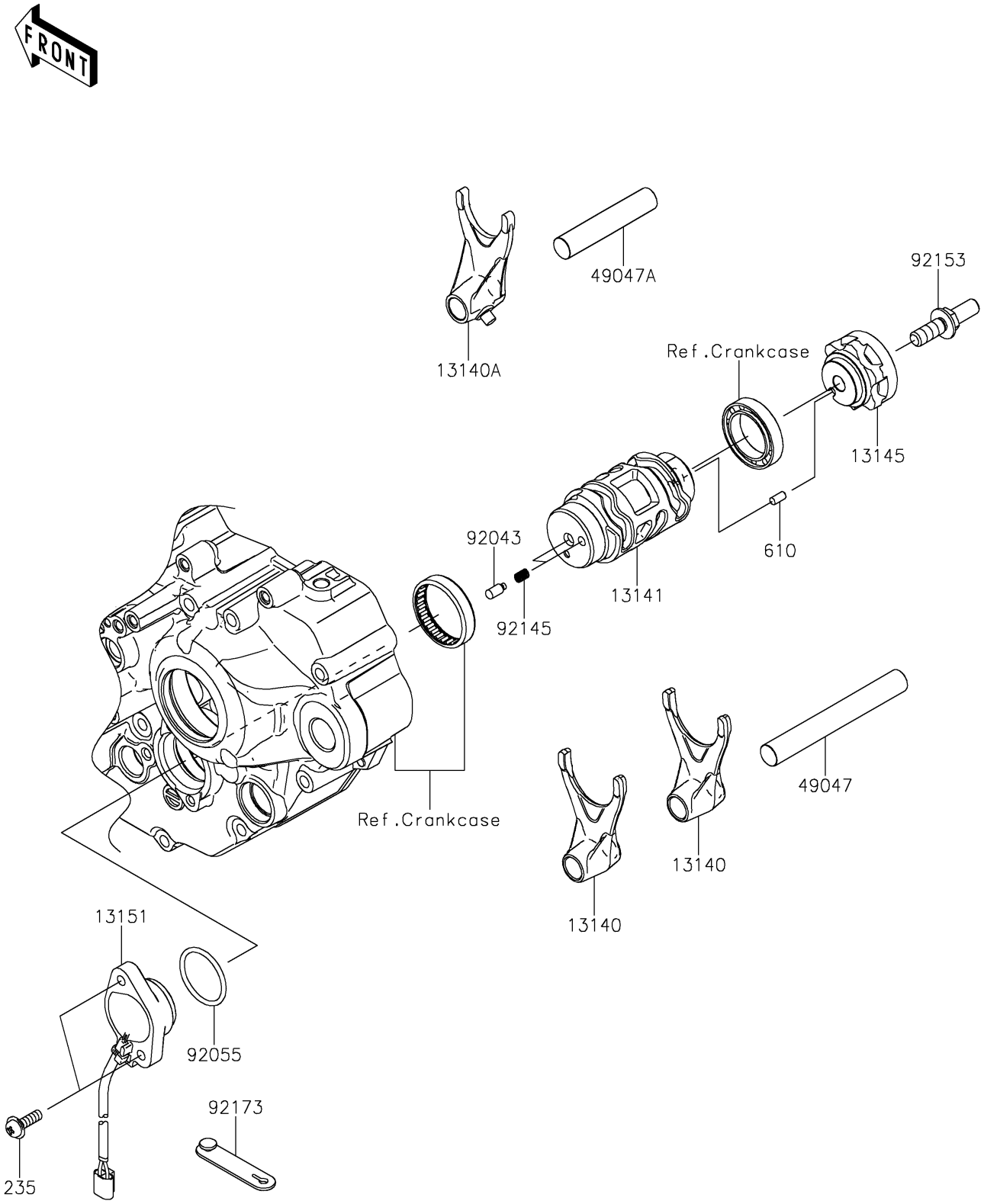

© 2024 Kawasaki Motors Corp., U.S.A.

2021 KX™250 PARTS LIST

Gear Change Drum/Shift Fork(s)

ITEM NAME	PART NUMBER	QUANTITY
FORK-SHIFT,OUTPUT (Ref # 13140)	13140-0689	2
FORK-SHIFT,INPUT (Ref # 13140A)	13140-0690	1
DRUM-CHANGE (Ref # 13141)	13141-0612	1
CAM-CHANGE DRUM (Ref # 13145)	13145-0565	1
SWITCH-COMP,GEAR POSITION (Ref # 13151)	13151-0594	1
ROD-SHIFT,OUTPUT,L=94.5 (Ref # 49047)	49047-0620	1
ROD-SHIFT,INPUT,L=63 (Ref # 49047A)	49047-0621	1
PIN (Ref # 92043)	92043-1654	2
RING-O,27.7X2.4 (Ref # 92055)	92055-091	1
SPRING (Ref # 92145)	92145-1414	2
BOLT,8X20 (Ref # 92153)	92153-0530	1
CLAMP,RUBBER PLATE (Ref # 92173)	92173-1229	1
SCREW-PAN-WP-CROS,5X16 (Ref # 235)	235AB0516	2
ROLLER,4X8 (Ref # 610)	610A0408	1

© 2024 Kawasaki Motors Corp., U.S.A.