2004 KX250F PARTS DIAGRAM

Cylinder Head

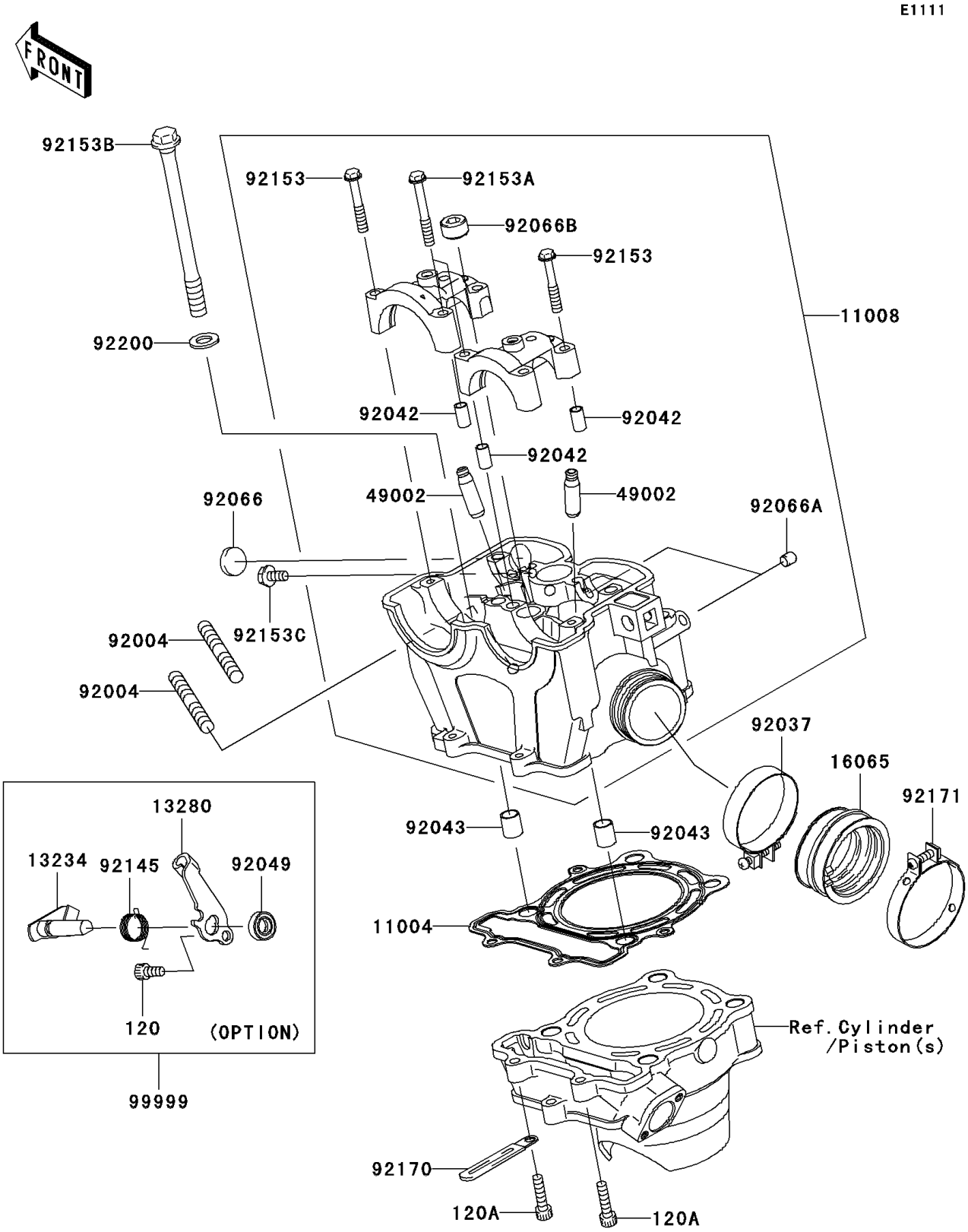

© 2026 Kawasaki Motors Corp., U.S.A.

2004 KX250F PARTS LIST

Cylinder Head

ITEM NAME	PART NUMBER	QUANTITY
BOLT-SOCKET,6X12 (Ref # 120)	120P0612	1
BOLT-SOCKET,6X25 (Ref # 120A)	120P0625	2
GASKET-HEAD (Ref # 11004)	11004-0003	1
HEAD-COMP-CYLINDER (Ref # 11008)	11008-0009	1
SHAFT-COMP,DECOMP (Ref # 13234)	13234-0009	1
HOLDER,DECOMP (Ref # 13280)	13280-0038	1
HOLDER-CARBURETOR (Ref # 16065)	16065-0012	1
GUIDE-VALVE (Ref # 49002)	49002-0003	AR
STUD,8X22 (Ref # 92004)	92004-1249	2
CLAMP (Ref # 92037)	92037-1523	1
PIN,DOWEL,6.3X8X14 (Ref # 92042)	92042-007	4
PIN,10.1X12X14 (Ref # 92043)	92043-4009	2
SEAL-OIL (Ref # 92049)	92049-1196	1
PLUG,4X18 (Ref # 92066)	92066-0024	1
PLUG,OIL LINE,7.2X8 (Ref # 92066A)	92066-1012	2
PLUG,10X16.6 (Ref # 92066B)	92066-3777	1
SPRING (Ref # 92145)	92145-0048	1
BOLT,6X38 (Ref # 92153)	92153-0338	6
BOLT,6X45 (Ref # 92153A)	92153-0339	2
BOLT,10X122 (Ref # 92153B)	92153-0341	4
BOLT,6X12 (Ref # 92153C)	92153-0806	1
CLAMP (Ref # 92170)	92170-1514	1
CLAMP (Ref # 92171)	92171-0314	1
WASHER,10.5X19X2.3 (Ref # 92200)	92200-1339	4
KIT.,MANUAL DECOMP (Ref # 99999)	99999-0023	1

© 2026 Kawasaki Motors Corp., U.S.A.