2021 VULCAN® S ABS PARTS DIAGRAM

Stand(s)

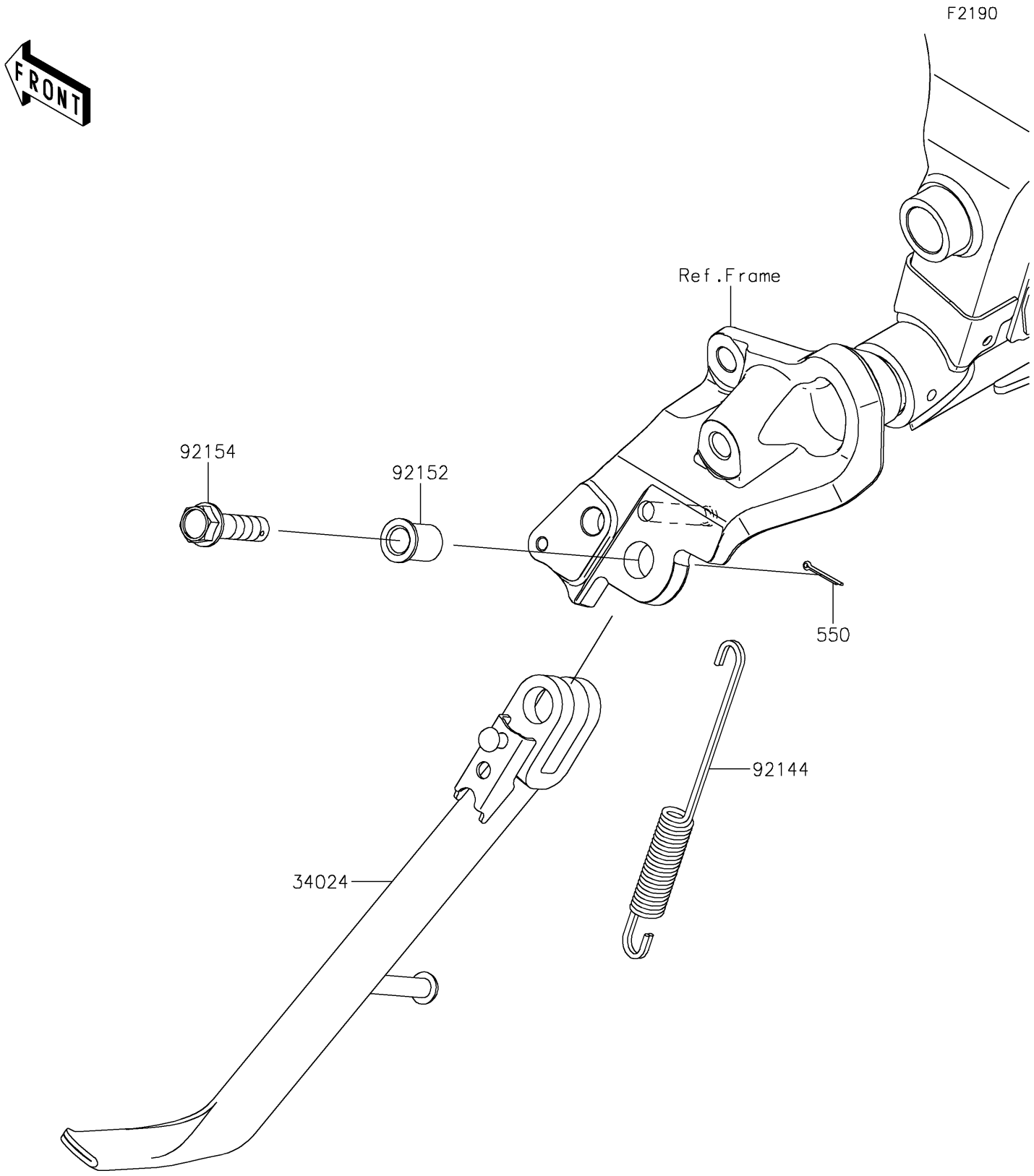

© 2024 Kawasaki Motors Corp., U.S.A.

2021 VULCAN® S ABS PARTS LIST

Stand(s)

ITEM NAME	PART NUMBER	QUANTITY
STAND-SIDE (Ref # 34024)	34024-0127	1
PIN-COTTER,2.0X15 (Ref # 550)	550AA2015	1
SPRING,SIDE STAND (Ref # 92144)	92144-1818	1
COLLAR,10.2X15X20.1 (Ref # 92152)	92152-1914	1
BOLT,FLANGED,10X37 (Ref # 92154)	92154-1539	1

© 2024 Kawasaki Motors Corp., U.S.A.