2004 KX250 PARTS DIAGRAM

Frame Fittings

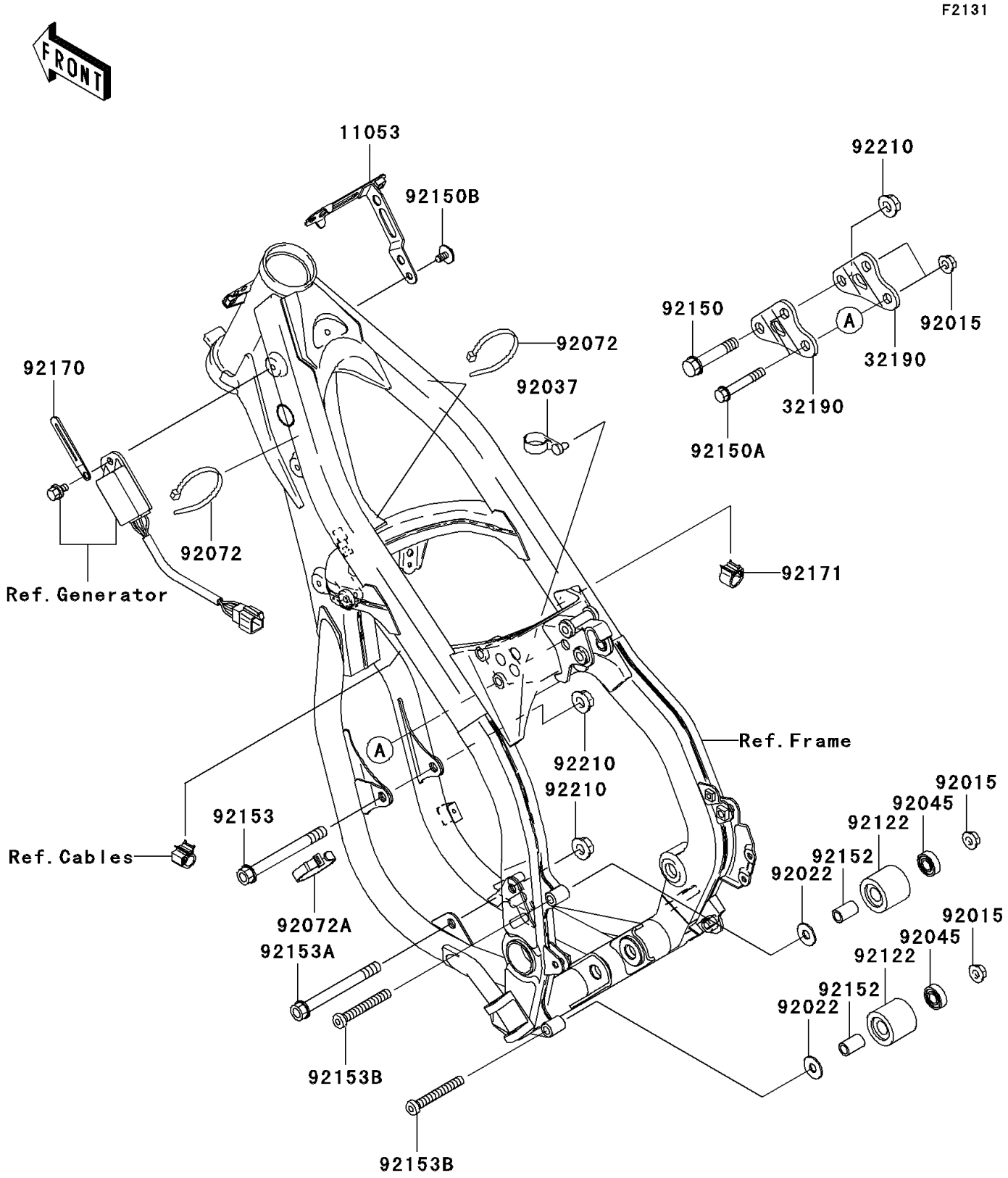

© 2024 Kawasaki Motors Corp., U.S.A.

2004 KX250 PARTS LIST

Frame Fittings

ITEM NAME	PART NUMBER	QUANTITY
BRACKET,IGNITER (Ref # 11053)	11053-0467	1
BRACKET-ENGINE (Ref # 32190)	32190-1266	2
NUT,8MM (Ref # 92015)	92015-1432	4
WASHER,8.5X22X1.5 (Ref # 92022)	92022-1629	2
CLAMP,SPEED,L=43 (Ref # 92037)	92037-1290	1
BEARING-BALL,608LLU/2A (Ref # 92045)	92045-1009	2
BAND,L=202 (Ref # 92072)	92072-1195	3
BAND,L=140 (Ref # 92072A)	92072-1293	1
ROLLER,CHAIN GUIDE (Ref # 92122)	92122-1216	2
BOLT,FLANGED,10X50 (Ref # 92150)	92150-1125	1
BOLT,FLANGED,8X50 (Ref # 92150A)	92150-1214	2
BOLT,6X12 (Ref # 92150B)	92150-1435	1
COLLAR,8.5X12.5X20.5 (Ref # 92152)	92152-1340	2
BOLT,FLANGED,10X95 (Ref # 92153)	92153-0613	1
BOLT,FLANGED,10X105 (Ref # 92153A)	92153-0614	1
BOLT,SOCKET,8X60 (Ref # 92153B)	92153-1259	2
CLAMP (Ref # 92170)	92170-1514	1
CLAMP,DIA=10 (Ref # 92171)	92171-1423	1
NUT,LOCK,FLANGED,10MM (Ref # 92210)	92210-1080	3

© 2024 Kawasaki Motors Corp., U.S.A.