2018 NINJA® 1000 ABS PARTS DIAGRAM

Rear Fender(s)

F2172

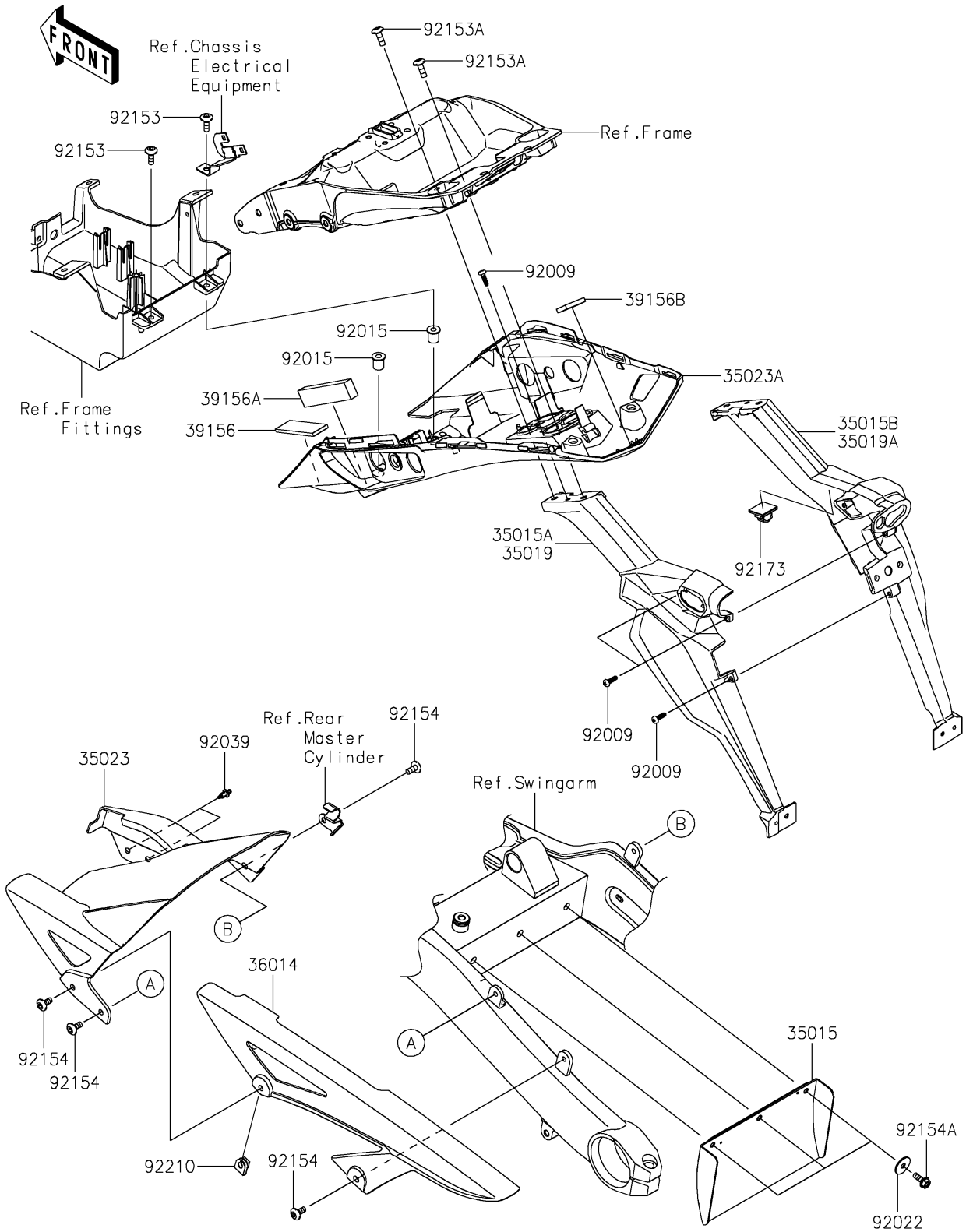

© 2024 Kawasaki Motors Corp., U.S.A.

2018 NINJA® 1000 ABS PARTS LIST

Rear Fender(s)

ITEM NAME	PART NUMBER	QUANTITY
FLAP-COMP (Ref # 35015)	35015-0032	1
FLAP,LH (Ref # 35019)	35019-0643	1
FLAP,RH (Ref # 35019A)	35019-0644	1
FENDER-REAR,INNER (Ref # 35023)	35023-0424	1
FENDER-REAR (Ref # 35023A)	35023-0426	1
CASE-CHAIN (Ref # 36014)	36014-0029	1
PAD,25X70X4 (Ref # 39156)	39156-0748	1
PAD,12X95X22 (Ref # 39156A)	39156-1821	1
PAD,20X30X5 (Ref # 39156B)	39156-2178	1
SCREW,TAPPING,5X16 (Ref # 92009)	92009-1984	5
NUT (Ref # 92015)	92015-1700	2
WASHER,7X24X1.6 (Ref # 92022)	92022-1160	3
RIVET (Ref # 92039)	92039-0060	2
BOLT,6X18 (Ref # 92153)	92153-0816	2
BOLT,SOCKET,6X18 (Ref # 92153A)	92153-1675	4
BOLT,SOCKET,6X14 (Ref # 92154)	92154-0745	4
BOLT,FLANGED,6X16 (Ref # 92154A)	92154-0899	3
CLAMP,DRAIN (Ref # 92173)	92173-1055	1
NUT,6MM (Ref # 92210)	92210-0277	1

© 2024 Kawasaki Motors Corp., U.S.A.