2019 NINJA® 1000 ABS

PARTS DIAGRAM

Gear Change Mechanism

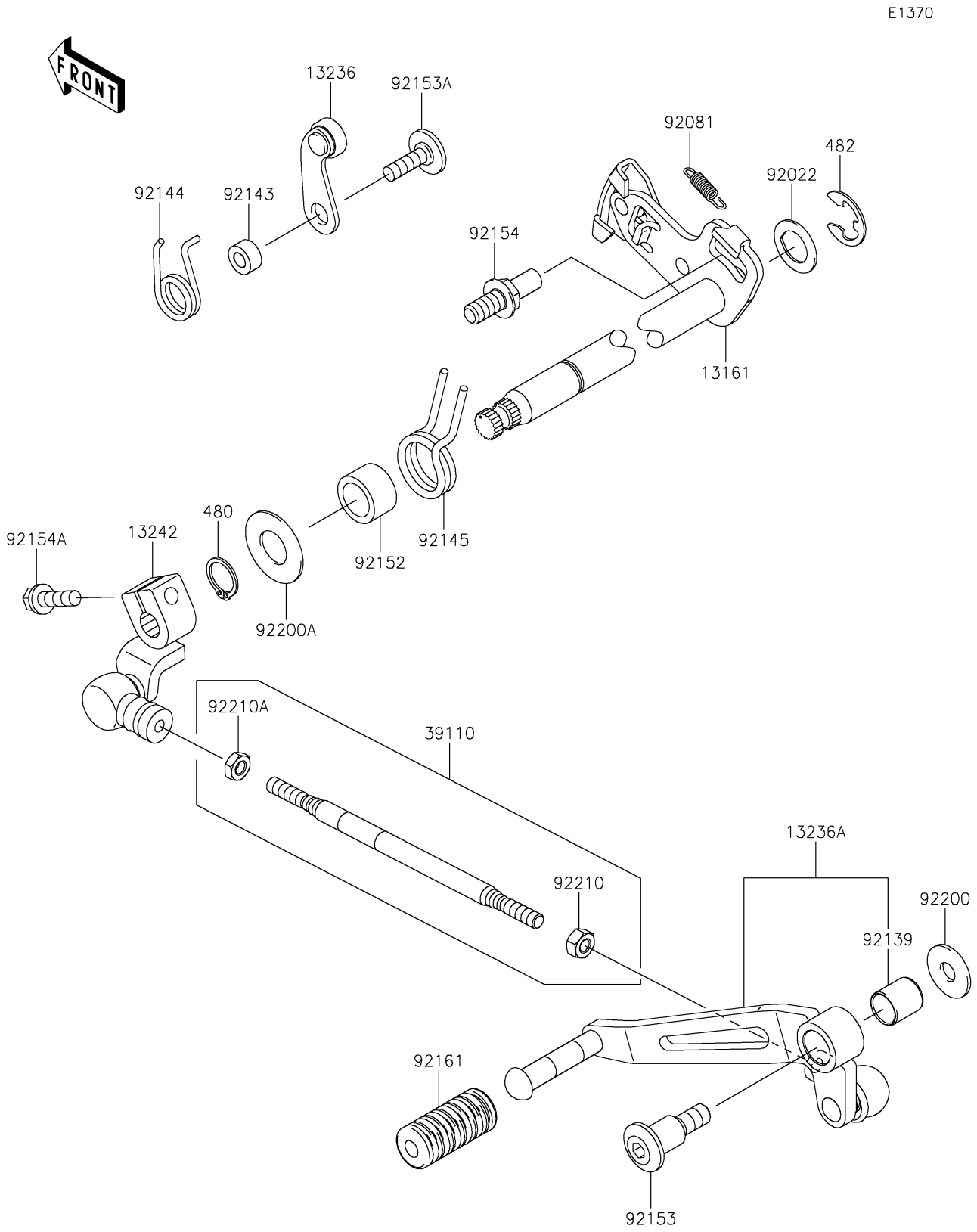

© 2026 Kawasaki Motors Corp., U.S.A.

2019 NINJA® 1000 ABS

PARTS LIST

Gear Change Mechanism

Kawasaki
Let the Good Times Roll®

ITEM NAME	PART NUMBER	QUANTITY
LEVER-COMP-CHANGE SHAFT (Ref # 13161)	13161-0592	1
LEVER-COMP (Ref # 13236)	13236-0068	1
LEVER-COMP,CHANGE PEDAL (Ref # 13236A)	13236-0788	1
LEVER-ASSY-CHANGE (Ref # 13242)	13242-0139	1
ROD-ASSY-TIE (Ref # 39110)	39110-0033	1
CIRCLIP-TYPE-C,14MM (Ref # 480)	480J1400	1
CIRCLIP-TYPE-E,12MM (Ref # 482)	482J0200	1
WASHER,CHANGE SHAFT (Ref # 92022)	92022-1628	1
SPRING,PAWL RETURN (Ref # 92081)	92081-1708	1
BUSHING (Ref # 92139)	92139-0023	1
COLLAR (Ref # 92143)	92143-1595	1
SPRING,GEAR POSITION (Ref # 92144)	92144-1523	1
SPRING (Ref # 92145)	92145-1122	1
COLLAR,14.2X19.9X12.0 (Ref # 92152)	92152-1383	1
BOLT,SOCKET,8X16.7 (Ref # 92153)	92153-0446	1
BOLT,6X20 (Ref # 92153A)	92153-1505	1
BOLT,RETURN SPRING (Ref # 92154)	92154-1838	1
BOLT,FLANGED,6X20 (Ref # 92154A)	92154-2090	1
DAMPER,CHANGE PEDAL (Ref # 92161)	92161-1300	1
WASHER,8.0X22.0X1.5 (Ref # 92200)	92200-0174	1
WASHER (Ref # 92200A)	92200-0265	1
NUT,6MM (Ref # 92210)	92210-1100	1
NUT,LEFT HANDED,6MM (Ref # 92210A)	92210-1101	1

© 2026 Kawasaki Motors Corp., U.S.A.