2021 Z900 ABS PARTS DIAGRAM

Taillight(s)

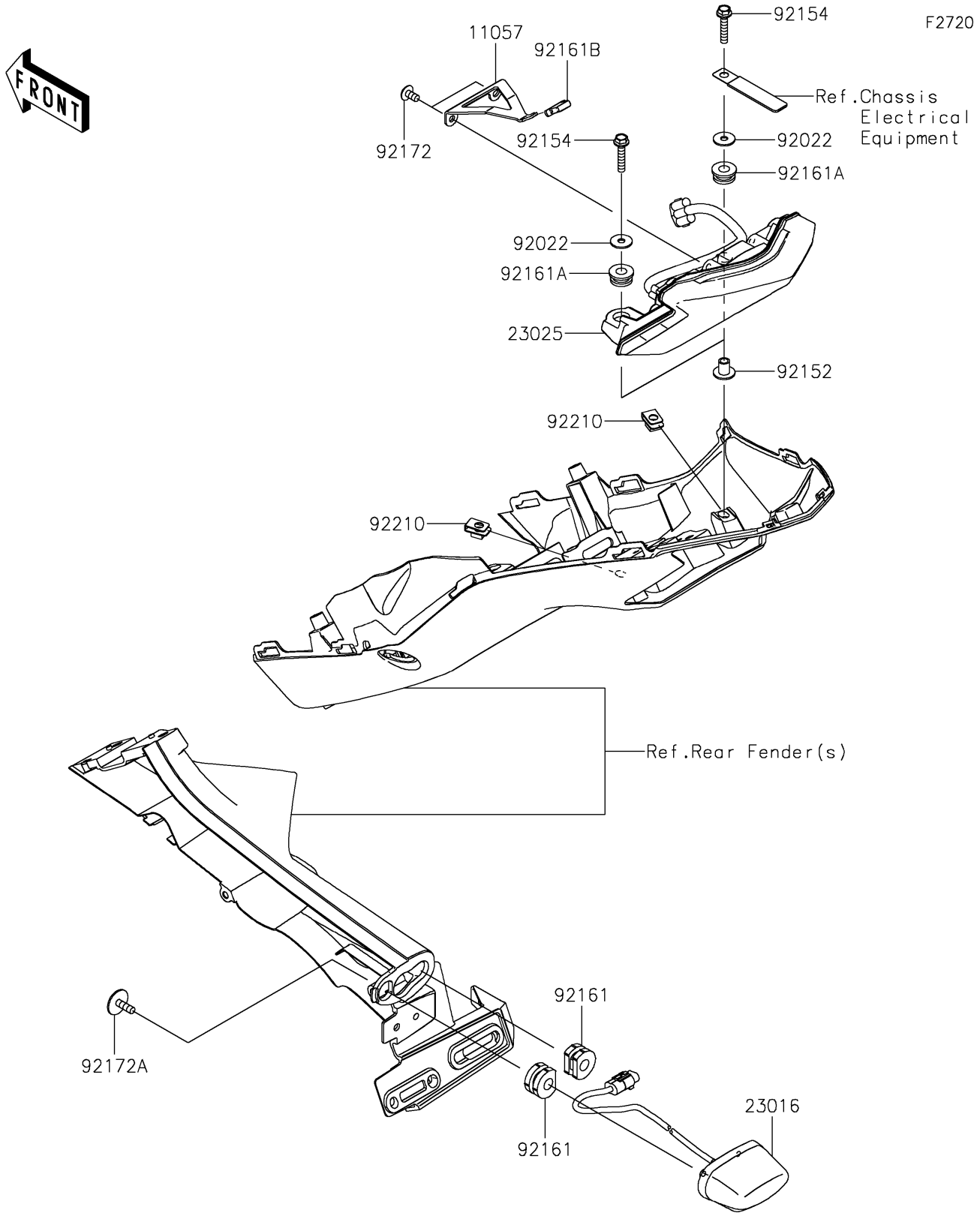

© 2024 Kawasaki Motors Corp., U.S.A.

2021 Z900 ABS PARTS LIST

Taillight(s)

ITEM NAME	PART NUMBER	QUANTITY
BRACKET,TAIL LAMP (Ref # 11057)	11057-0247	1
LAMP-ASSY,LICENSE,LED (Ref # 23016)	23016-0639	1
LAMP-TAIL (Ref # 23025)	23025-0361	1
WASHER,5.2X16X1.2 (Ref # 92022)	92022-263	2
COLLAR,5.6X8X11.2 (Ref # 92152)	92152-1562	2
BOLT,FLANGED,5X25 (Ref # 92154)	92154-2682	2
DAMPER (Ref # 92161)	92161-0776	2
DAMPER,8X18X8.1 (Ref # 92161A)	92161-1369	2
DAMPER (Ref # 92161B)	92161-1917	1
SCREW,5X10 (Ref # 92172)	92172-0864	2
SCREW,TAPTITE,5X16 (Ref # 92172A)	92172-1427	2
NUT,PLATE,5MM (Ref # 92210)	92210-0935	2

© 2024 Kawasaki Motors Corp., U.S.A.