1999 KX250 PARTS DIAGRAM

Frame

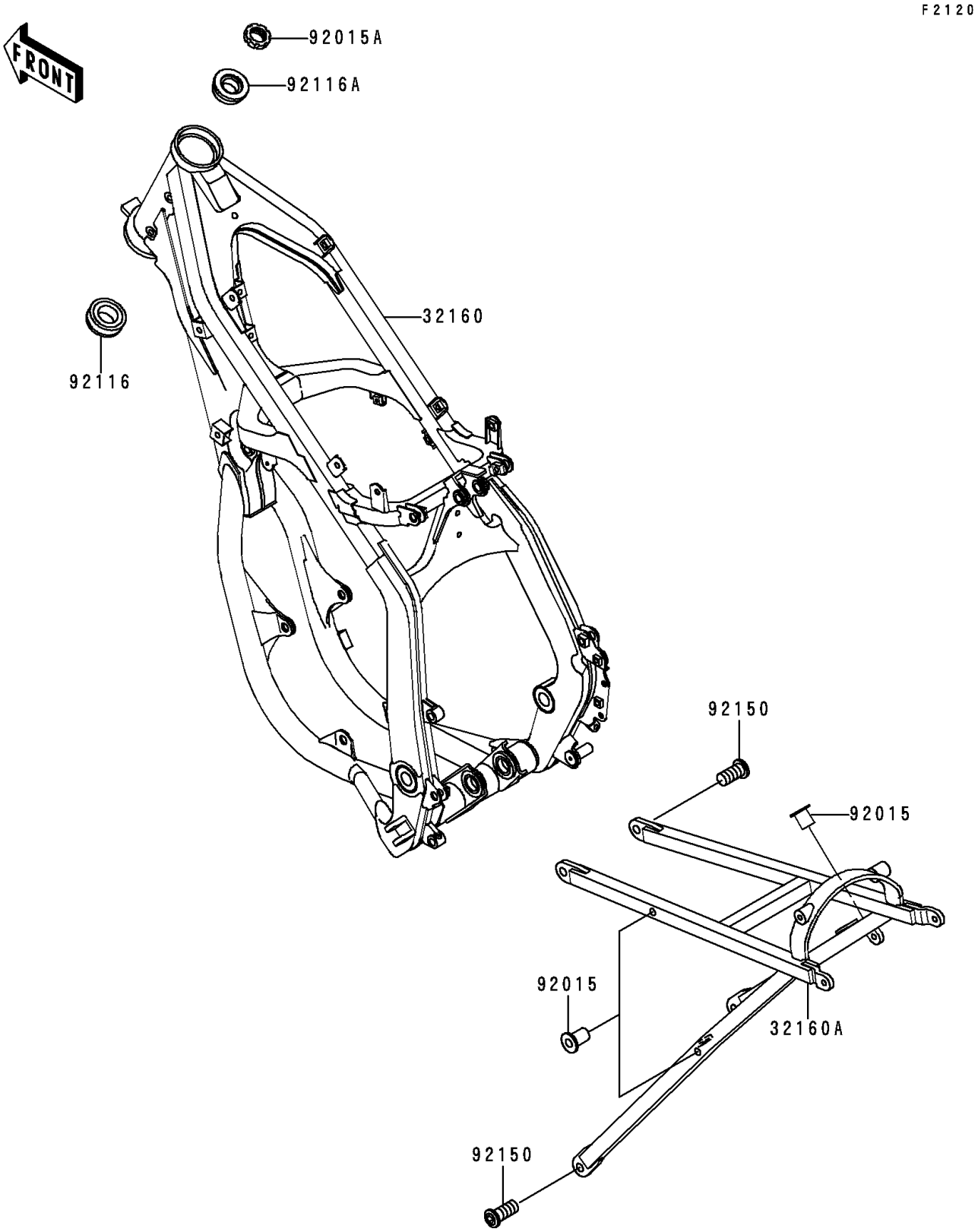

© 2026 Kawasaki Motors Corp., U.S.A.

1999 KX250 PARTS LIST

Frame

ITEM NAME	PART NUMBER	QUANTITY
FRAME-COMP,FR,L.GREEN (Ref # 32160)	32160-1545-CC	1
FRAME-COMP,RR,L.GREEN (Ref # 32160A)	32160-1547-CC	1
NUT,POP,6MM,L=16.5 (Ref # 92015)	92015-1792	5
NUT,STEERING STEM,28MM (Ref # 92015A)	92015-1861	1
BEARING-ROLLER,HI-CAP32006JRRS (Ref # 92116)	92116-1069	1
BEARING-ROLLER,HI-CAP320/28JRR (Ref # 92116A)	92116-1076	1
BOLT,SOCKET,8X20 (Ref # 92150)	92150-1839	4

© 2026 Kawasaki Motors Corp., U.S.A.