2020 Z650 ABS PARTS DIAGRAM

Labels

F2860

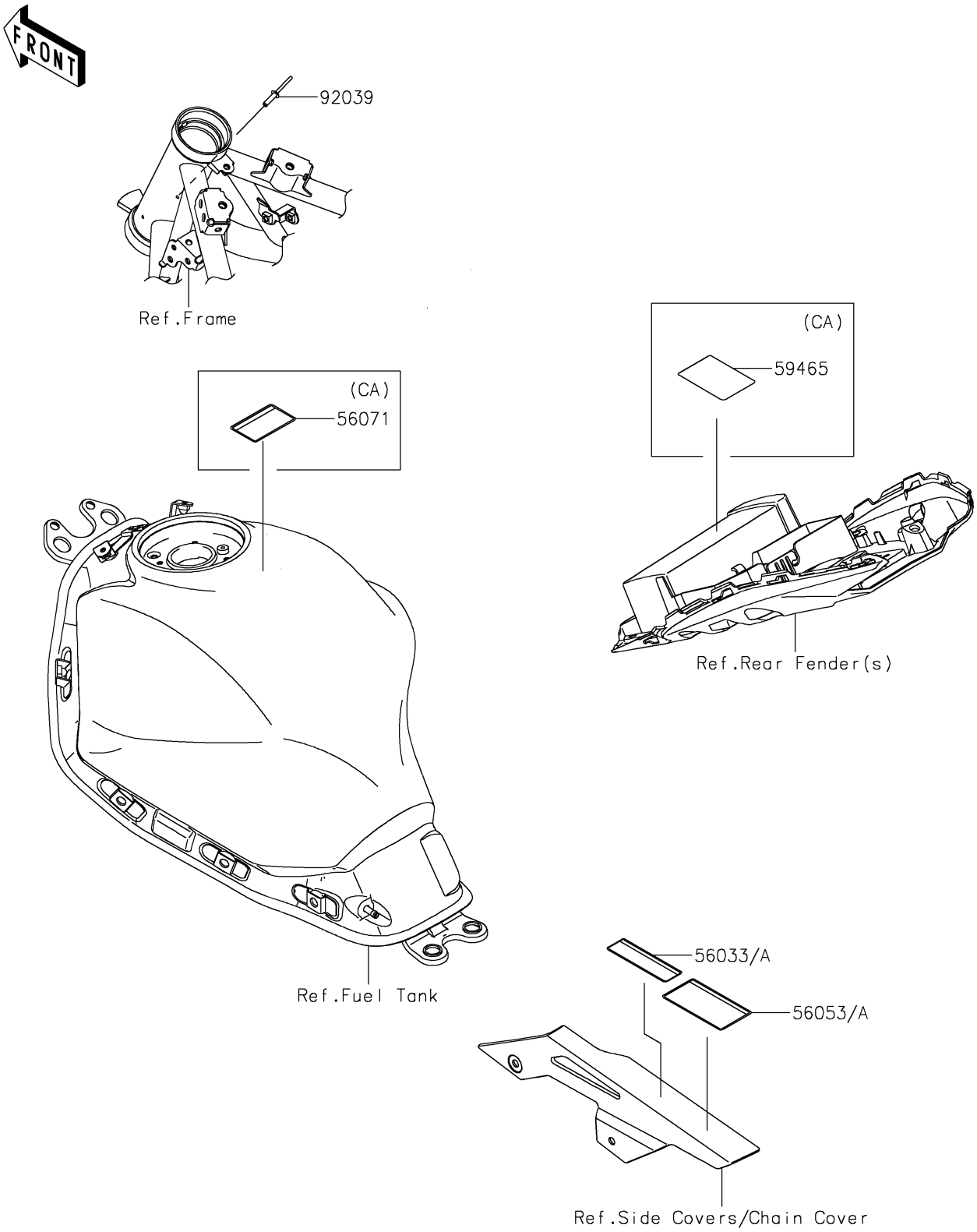

© 2024 Kawasaki Motors Corp., U.S.A.

2020 Z650 ABS PARTS LIST

Labels

ITEM NAME	PART NUMBER	QUANTITY
LABEL-MANUAL,CHAIN (Ref # 56033)	56033-0850	1
LABEL-MANUAL,CHAIN (Ref # 56033A)	56033-0853	1
LABEL-SPECIFICATION,TIRE&LOAD (Ref # 56053)	56053-1724	1
LABEL-SPECIFICATION,TIRE&LOAD (Ref # 56053A)	56053-1725	1
LABEL-WARNING,EVAPO (Ref # 56071)	56071-0158	1
LABEL-CERTIFICATION (Ref # 59465)	59465-1871	1
RIVET (Ref # 92039)	92039-1251	1

© 2024 Kawasaki Motors Corp., U.S.A.