2020 Z650 ABS PARTS DIAGRAM

Owner's Tools

F2810

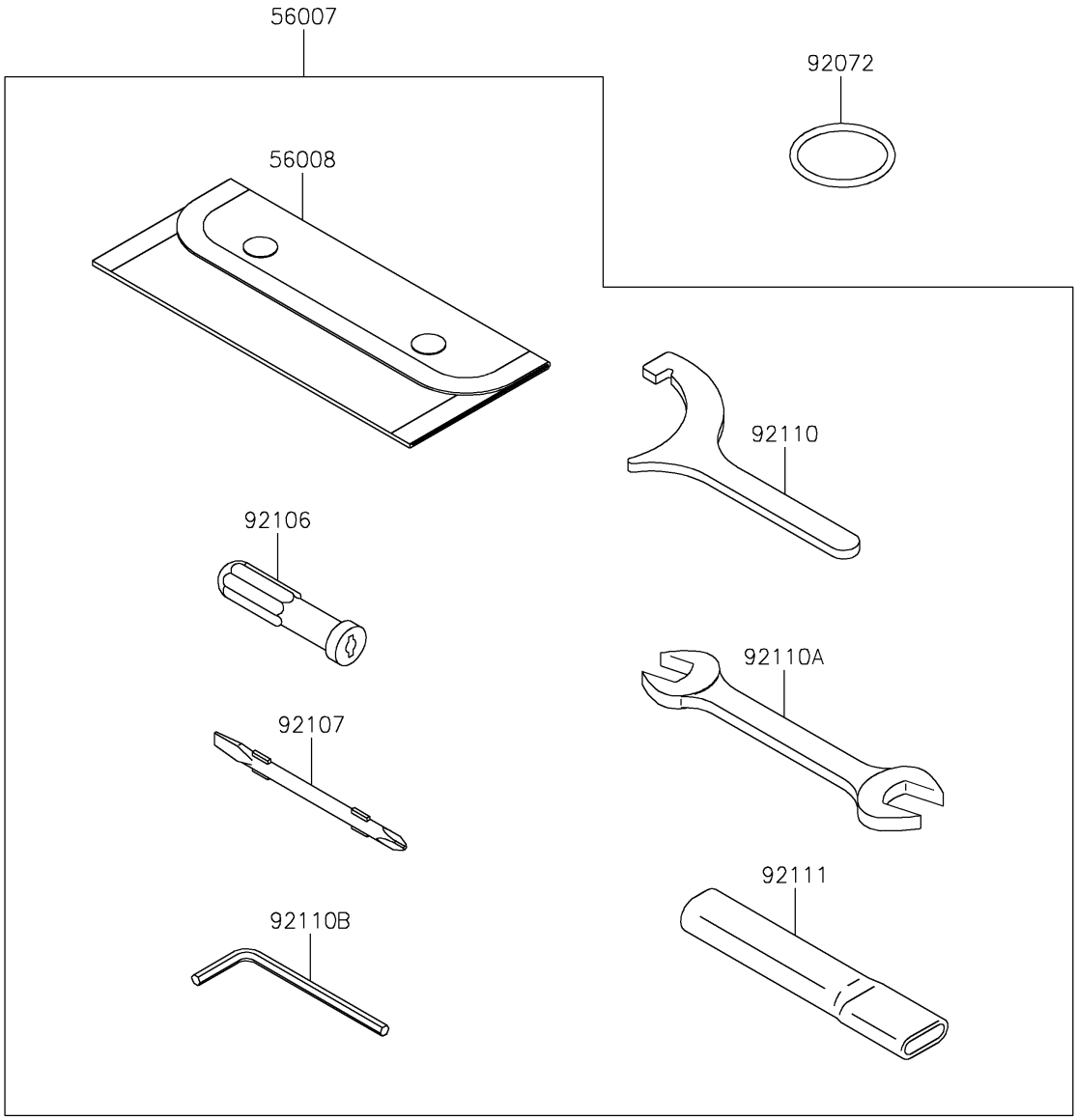

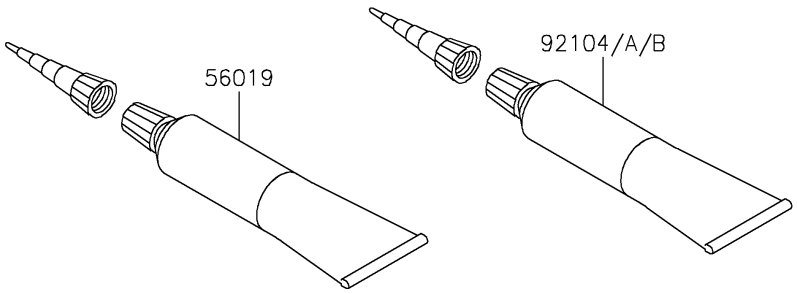

© 2024 Kawasaki Motors Corp., U.S.A.

2020 Z650 ABS PARTS LIST

Owner's Tools

ITEM NAME	PART NUMBER	QUANTITY
TOOL-KIT (Ref # 56007)	56007-0176	1
BAG (Ref # 56008)	56008-0038	1
GASKET-LIQUID,TB1211,WHITE (Ref # 56019)	56019-120	1
BAND,TOOL CASE (Ref # 92072)	92072-0865	1
GASKET-LIQUID,TB1211F,CLEAR (Ref # 92104)	92104-0004	1
GASKET-LIQUID,TB1216B,BLACK (Ref # 92104A)	92104-1064	1
GASKET-LIQUID,TB1207B,BLACK (Ref # 92104B)	92104-2068	1
GRIP-SCREW DRIVER (Ref # 92106)	92106-0004	1
TOOL-DRIVER,#2PHILLIPS&SLOT (Ref # 92107)	92107-0019	1
TOOL-WRENCH,HOOK SPANNER,R37.5 (Ref # 92110)	92110-0558	1
TOOL-WRENCH,OPEN END,12X14 (Ref # 92110A)	92110-0565	1
TOOL-WRENCH,ALLEN,4MM (Ref # 92110B)	92110-0567	1
TOOL-BAR,WRENCH (Ref # 92111)	92111-0008	1

© 2024 Kawasaki Motors Corp., U.S.A.