# 2020 VULCAN® S ABS PARTS DIAGRAM

## Frame Fittings

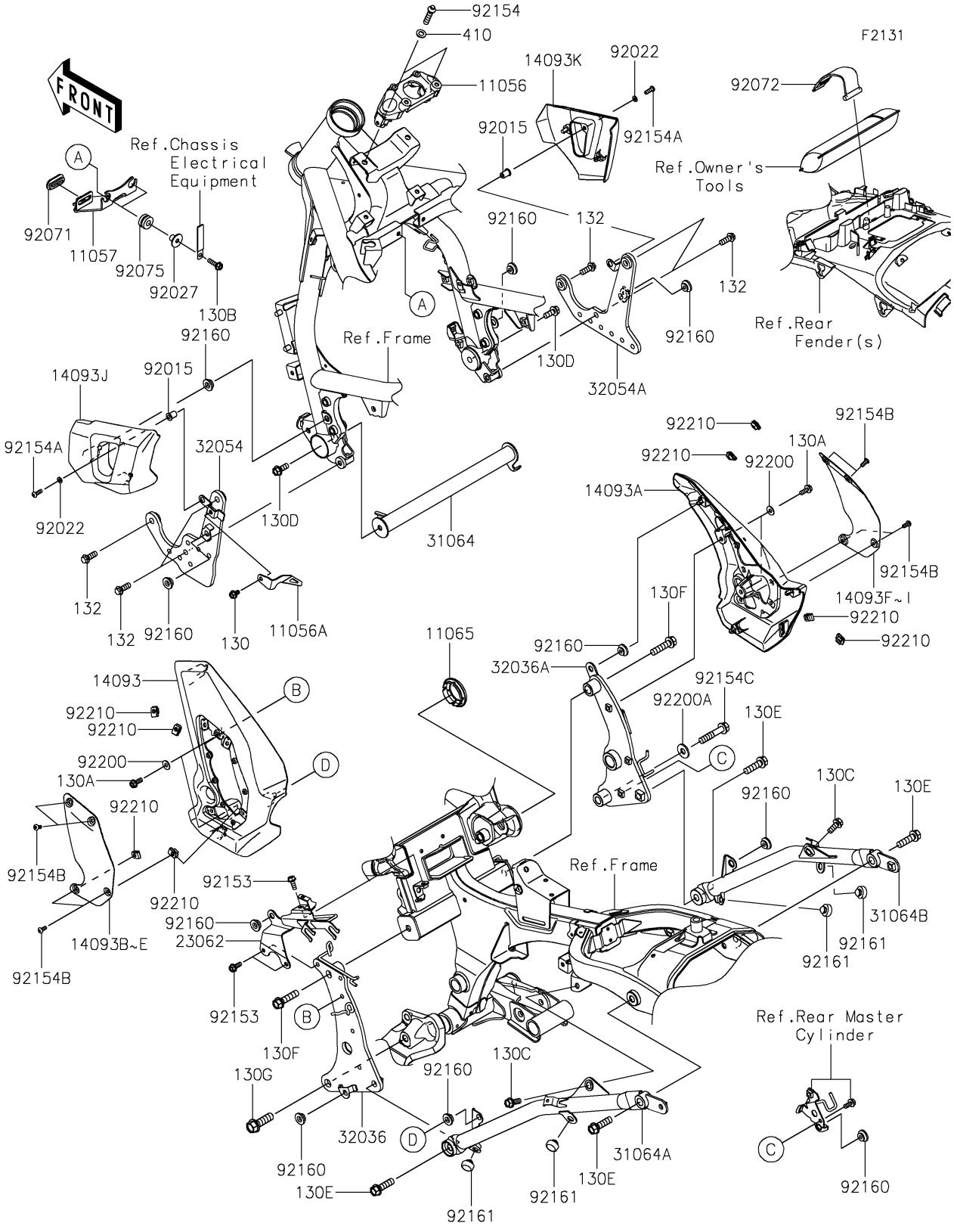


© 2024 Kawasaki Motors Corp., U.S.A.

# 2020 VULCAN® S ABS PARTS LIST

Frame Fittings

| ITEM NAME | PART NUMBER | QUANTITY |
|---|---|---|
| BRACKET,IGNITION SW. (Ref # 11056) | 11056-0805 | 1 |
| BRACKET,STEP STAY COVER,LH (Ref # 11056A) | 11056-4456 | 1 |
| BRACKET,REGULATOR (Ref # 11057) | 11057-0177 | 1 |
| CAP,SHOCK BKT.,F.S.BLACK (Ref # 11065) | 11065-0868-18T | 1 |
| COVER,PIVOT,LH (Ref # 14093) | 14093-0115 | 1 |
| COVER,PIVOT,RH (Ref # 14093A) | 14093-0116 | 1 |
| COVER,STEP STAY,LH,F.S.BLACK (Ref # 14093J) | 14093-0348-18T | 1 |
| COVER,STEP STAY,RH,F.S.BLACK (Ref # 14093K) | 14093-0349-18T | 1 |
| BRACKET-COMP,SIDE COVER (Ref # 23062) | 23062-0822 | 1 |
| PIPE-COMP,FR FRAME (Ref # 31064) | 31064-0649 | 1 |
| PIPE-COMP,RR,LH,F.S.BLACK (Ref # 31064A) | 31064-0652-18R | 1 |
| PIPE-COMP,RR,RH,F.S.BLACK (Ref # 31064B) | 31064-0653-18R | 1 |
| BRACKET-SWINGARM,LH (Ref # 32036) | 32036-0349 | 1 |
| BRACKET-SWINGARM,RH (Ref # 32036A) | 32036-0350 | 1 |
| BRACKET-STEP,LH (Ref # 32054) | 32054-0075 | 1 |
| BRACKET-STEP,RH (Ref # 32054A) | 32054-0076 | 1 |
| NUT,WELL,5MM (Ref # 92015) | 92015-1757 | 2 |
| WASHER,5.1X10X1.0 (Ref # 92022) | 92022-1977 | 2 |
| COLLAR,L=13.1,BLACK (Ref # 92027) | 92027-1450 | 2 |
| GROMMET (Ref # 92071) | 92071-0013 | 1 |
| BAND,TOOL (Ref # 92072) | 92072-0056 | 1 |
| DAMPER (Ref # 92075) | 92075-209 | 2 |
| BOLT,FLANGED,6X16 (Ref # 92153) | 92153-0713 | 3 |
| BOLT,TORX,8X35 (Ref # 92154) | 92154-0730 | 2 |
| BOLT,SOCKET,5X16 (Ref # 92154A) | 92154-1470 | 2 |
| BOLT,SOCKET,5X12 (Ref # 92154B) | 92154-1471 | 8 |
| BOLT-FLANGED,6X10 (Ref # 130) | 130BA0610 | 1 |
| BOLT-FLANGED,6X16 (Ref # 130A) | 130BA0616 | 4 |
| BOLT-FLANGED,6X22 (Ref # 130B) | 130BA0622 | 2 |

© 2024 Kawasaki Motors Corp., U.S.A.

# 2020 VULCAN® S ABS PARTS LIST

## Frame Fittings

| ITEM NAME | PART NUMBER | QUANTITY |
|---|---|---|
| BOLT-FLANGED,8X20 (Ref # 130C) | 130BA0820 | 2 |
| BOLT-FLANGED,8X20 (Ref # 130D) | 130CA0820 | 2 |
| BOLT-FLANGED,10X35 (Ref # 130E) | 130CA1035 | 4 |
| BOLT-FLANGED,10X40 (Ref # 130F) | 130CA1040 | 2 |
| BOLT-FLANGED,12X40 (Ref # 130G) | 130CB1240 | 1 |
| BOLT-FLANGED-SMALL,8X22 (Ref # 132) | 132BB0822 | 6 |
| WASHER-PLAIN-SMALL,8MM (Ref # 410) | 410AA0800 | 2 |
| BOLT,FLANGED,10X50 (Ref # 92154C) | 92154-1620 | 1 |
| DAMPER (Ref # 92160) | 92160-1613 | 10 |
| DAMPER,10X20X8 (Ref # 92161) | 92161-0855 | 4 |
| WASHER,6.5X16X1.0 (Ref # 92200) | 92200-0796 | 4 |
| WASHER,10.2X25X2.3 (Ref # 92200A) | 92200-1686 | 1 |
| NUT,PLATE,5MM (Ref # 92210) | 92210-0935 | 8 |

© 2024 Kawasaki Motors Corp., U.S.A.