2019 Z900RS CAFE

PARTS DIAGRAM

Gear Change Drum/Shift Fork(s)

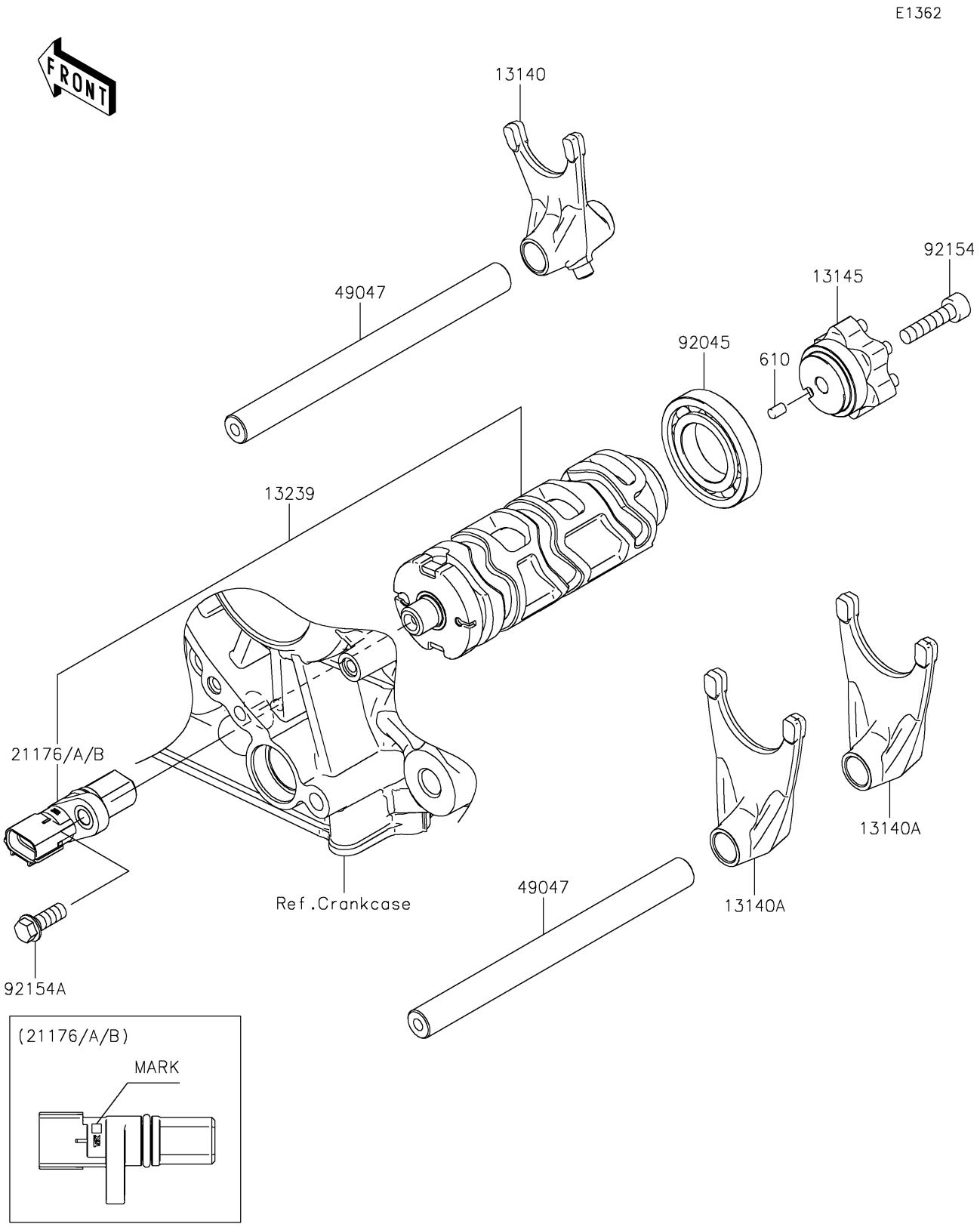

© 2026 Kawasaki Motors Corp., U.S.A.

2019 Z900RS CAFE

PARTS LIST

Gear Change Drum/Shift Fork(s)

ITEM NAME	PART NUMBER	QUANTITY
FORK-SHIFT (Ref # 13140)	13140-0061	1
FORK-SHIFT (Ref # 13140A)	13140-0062	2
CAM-CHANGE DRUM (Ref # 13145)	13145-0568	1
DRUM-ASSY-CHANGE (Ref # 13239)	13239-0581	1
SENSOR,GEAR POSITION,M MARK (Ref # 21176)	21176-0825	1
SENSOR,GEAR POSITION,H MARK (Ref # 21176A)	21176-0845	1
SENSOR,GEAR POSITION,L MARK (Ref # 21176B)	21176-0846	1
ROD-SHIFT (Ref # 49047)	49047-0644	2
ROLLER,4X6 (Ref # 610)	610A0406	1
BEARING-BALL,16005 (Ref # 92045)	92045-1045	1
BOLT,SOCKET,6X25 (Ref # 92154)	92154-0477	1
BOLT,FLANGED,6X16 (Ref # 92154A)	92154-2096	1

© 2026 Kawasaki Motors Corp., U.S.A.