2017 Versys-X 300 ABS PARTS DIAGRAM

Labels

F2860

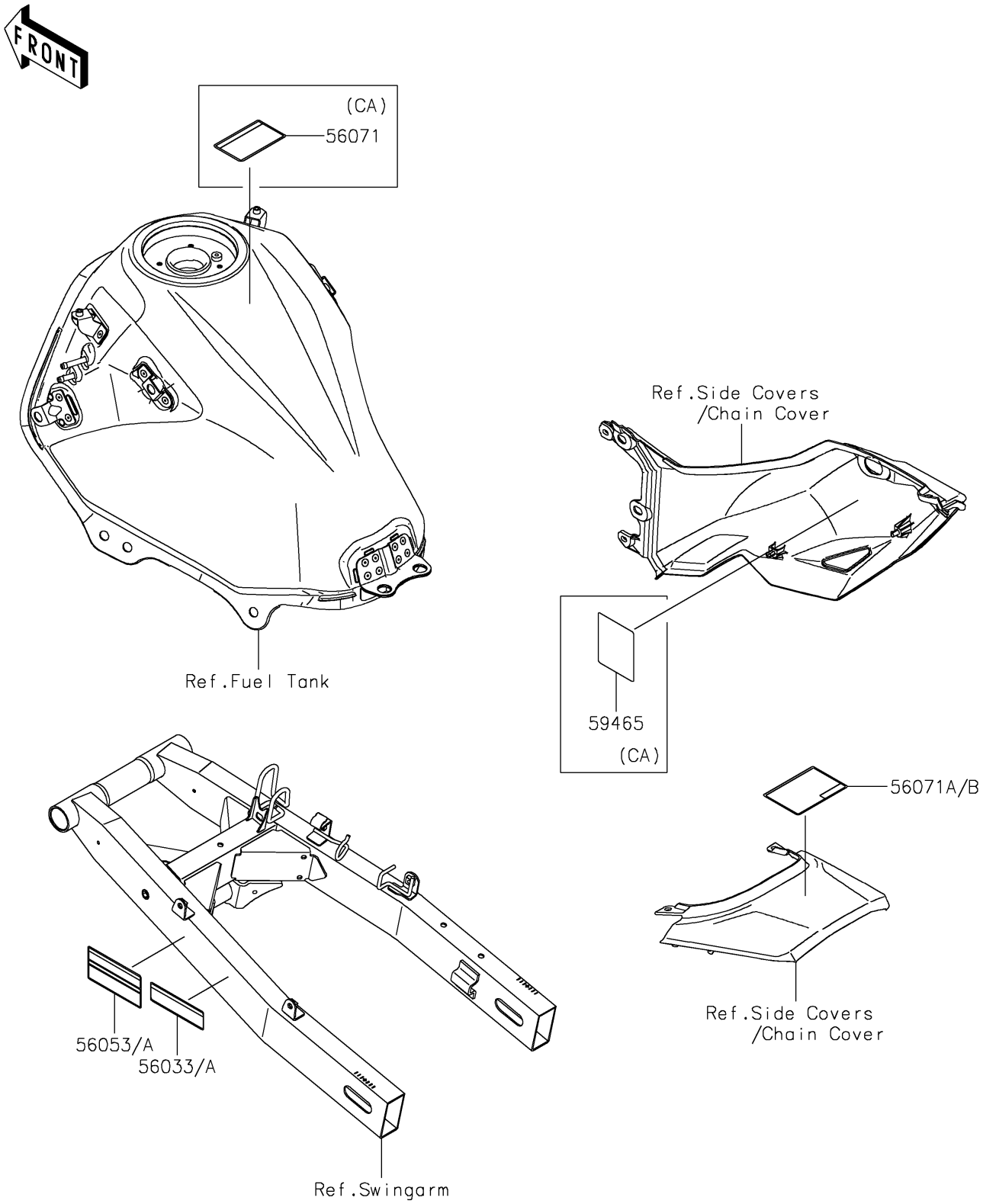

© 2026 Kawasaki Motors Corp., U.S.A.

2017 Versys-X 300 ABS PARTS LIST

Labels

ITEM NAME	PART NUMBER	QUANTITY
LABEL-MANUAL,CHAIN (Ref # 56033)	56033-1384	1
LABEL-MANUAL,CHAIN (Ref # 56033A)	56033-1388	1
LABEL-SPECIFICATION,TIRE&LOAD (Ref # 56053)	56053-1373	1
LABEL-SPECIFICATION,TIRE&LOAD (Ref # 56053A)	56053-1377	1
LABEL-WARNING,EVAPO (Ref # 56071)	56071-0158	1
LABEL-WARNING,CARRIER LOAD (Ref # 56071A)	56071-0736	1
LABEL-WARNING,CARRIER LOAD (Ref # 56071B)	56071-0738	1
LABEL-CERTIFICATION,EVAPO ROUT (Ref # 59465)	59465-2697	1

© 2026 Kawasaki Motors Corp., U.S.A.