2019 VERSYS®-X 300 ABS PARTS DIAGRAM

Ignition System

E1830

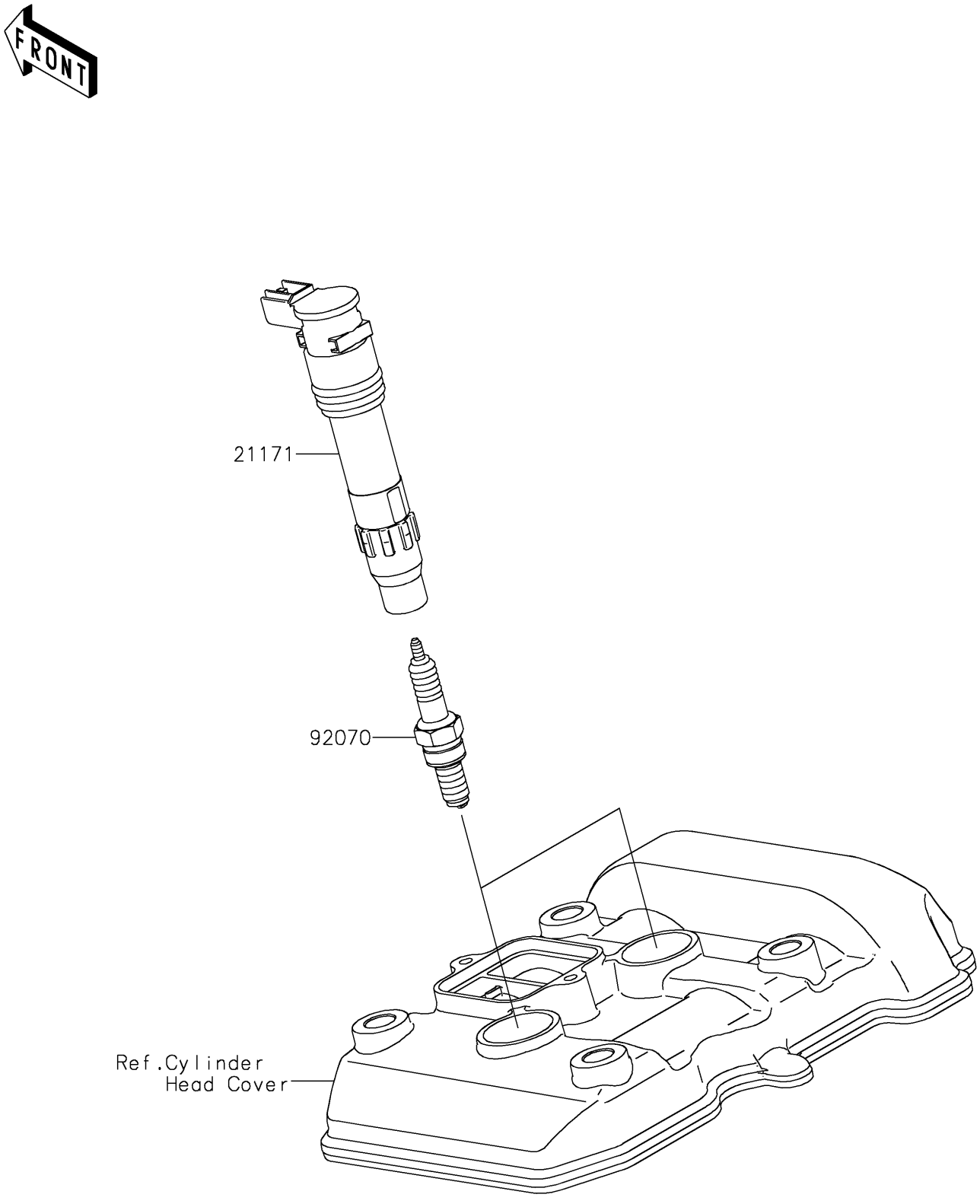

© 2024 Kawasaki Motors Corp., U.S.A.

2019 VERSYS®-X 300 ABS PARTS LIST

Ignition System

ITEM NAME	PART NUMBER	QUANTITY

© 2024 Kawasaki Motors Corp., U.S.A.