2019 VULCAN® 900 CLASSIC PARTS DIAGRAM

Brake Pedal/Torque Link

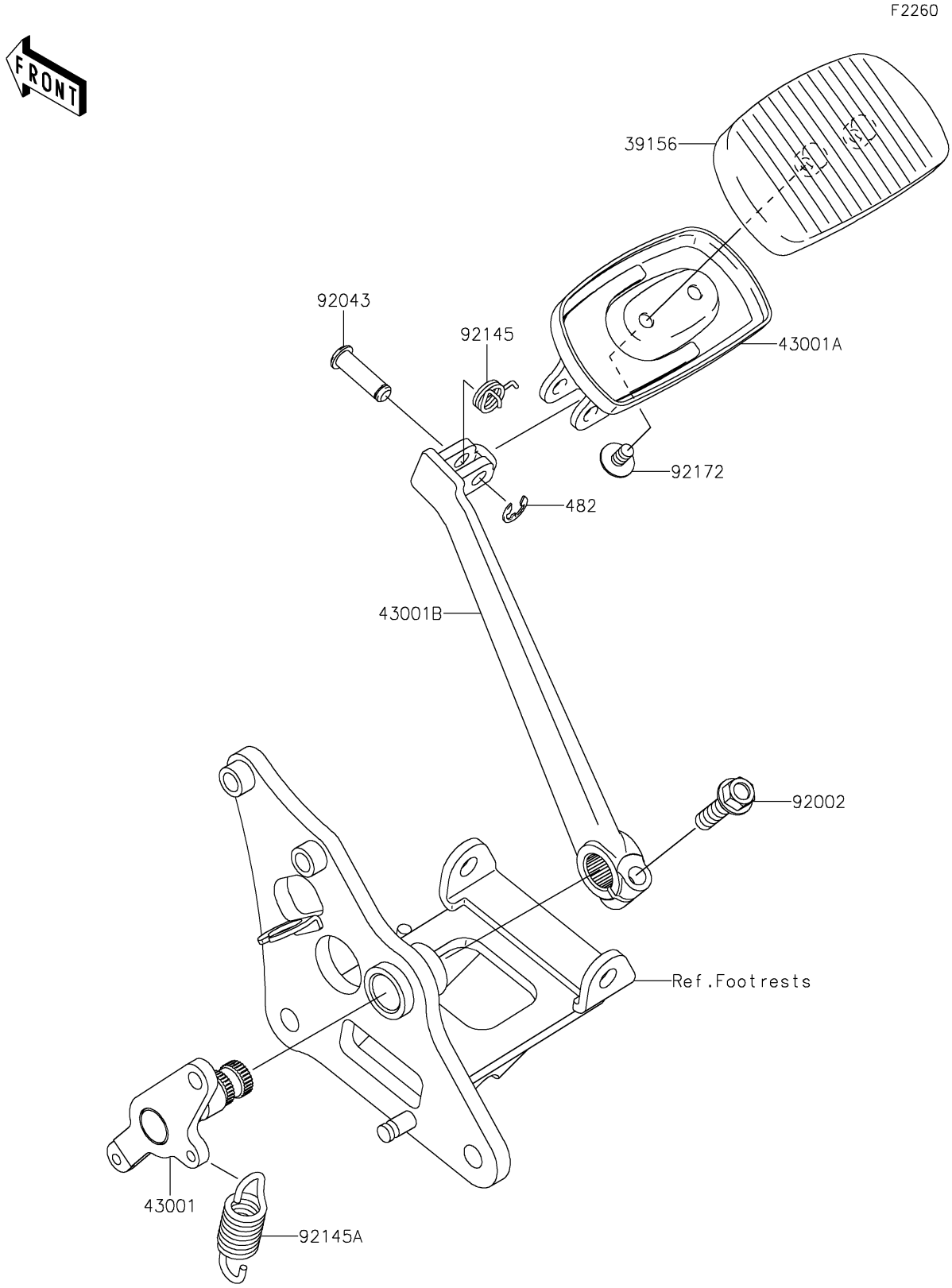

© 2024 Kawasaki Motors Corp., U.S.A.

2019 VULCAN® 900 CLASSIC PARTS LIST

Brake Pedal/Torque Link

ITEM NAME	PART NUMBER	QUANTITY
PAD,BRAKE PEDAL (Ref # 39156)	39156-0045	1
LEVER-BRAKE (Ref # 43001)	43001-0057	1
LEVER-BRAKE (Ref # 43001A)	43001-0709	1
LEVER-BRAKE,PEDAL (Ref # 43001B)	43001-0715	1
CIRCLIP-TYPE-E (Ref # 482)	482EA7000	1
BOLT,FLANGED,8X25 (Ref # 92002)	92002-1201	1
PIN,8X24.5 (Ref # 92043)	92043-0047	1
SPRING (Ref # 92145)	92145-0168	1
SPRING,BRAKE PEDAL RETURN (Ref # 92145A)	92145-0191	1
SCREW,6X10 (Ref # 92172)	92172-0098	2

© 2024 Kawasaki Motors Corp., U.S.A.