2020 NINJA® ZX™-14R ABS PARTS DIAGRAM

Taillight(s)

F2720

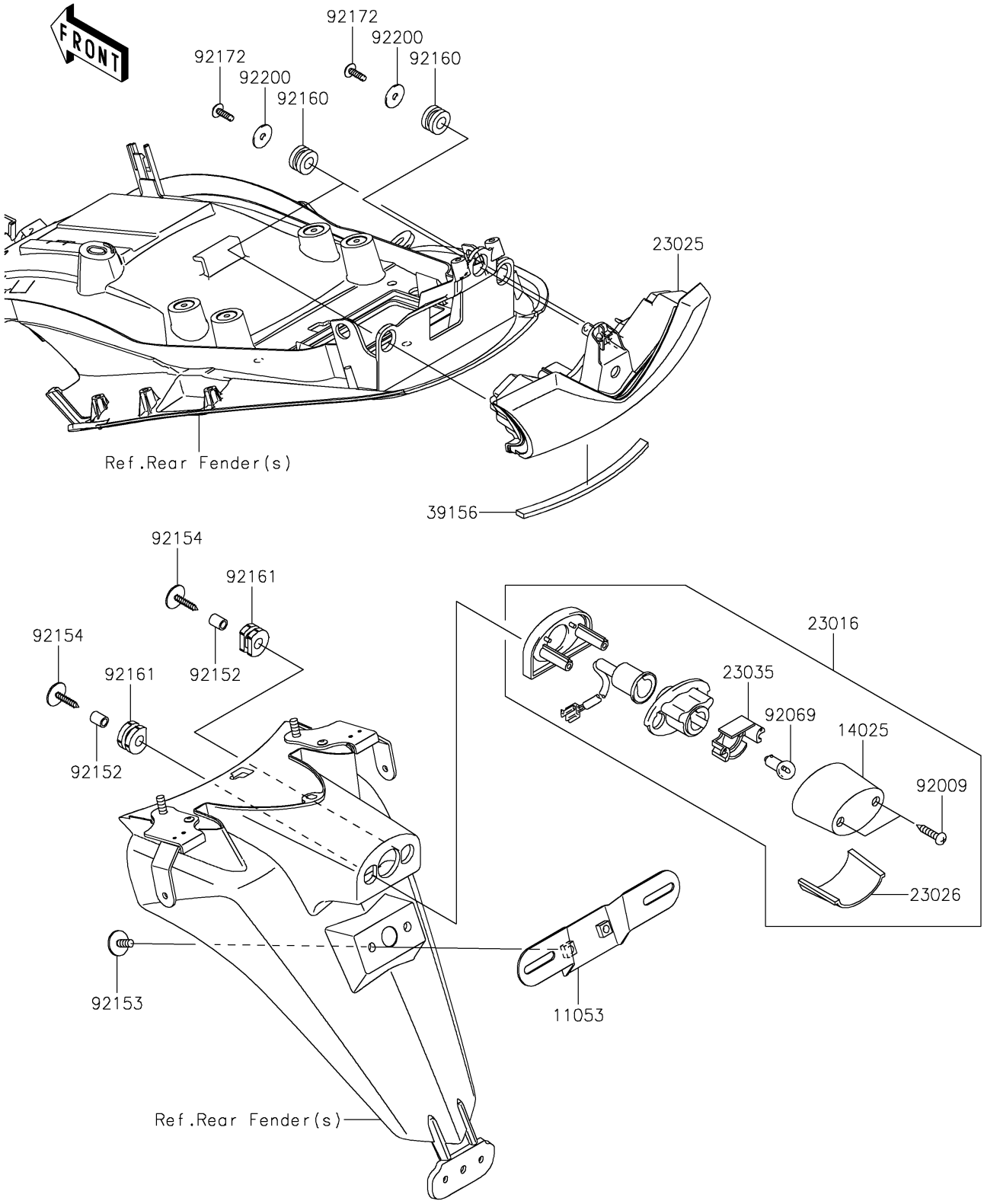

© 2026 Kawasaki Motors Corp., U.S.A.

2020 NINJA® ZX™-14R ABS PARTS LIST

Taillight(s)

ITEM NAME	PART NUMBER	QUANTITY
BRACKET,LICENSE (Ref # 11053)	11053-0400	1
COVER,LICENSE LAMP (Ref # 14025)	14025-1725	1
LAMP-ASSY,LICENSE (Ref # 23016)	23016-0565	1
LAMP-TAIL (Ref # 23025)	23025-0359	1
LENS,LICENSE LAMP (Ref # 23026)	23026-0021	1
REFLECTOR-LAMP,LICENSE (Ref # 23035)	23035-1066	1
PAD (Ref # 39156)	39156-0869	1
SCREW,TAPPING,4X20 (Ref # 92009)	92009-1378	2
BULB,12V 5W (Ref # 92069)	92069-1055	1
COLLAR,6X9X11.5 (Ref # 92152)	92152-0372	2
BOLT,6X16 (Ref # 92153)	92153-1423	2
BOLT,TAPPING,WASHER,5X25 (Ref # 92154)	92154-0261	2
DAMPER,10X20X12 (Ref # 92160)	92160-1167	3
DAMPER (Ref # 92161)	92161-0776	2
SCREW,TAPPING,5X16 (Ref # 92172)	92172-0238	3
WASHER,5.5X20X1.2 (Ref # 92200)	92200-0284	3

© 2026 Kawasaki Motors Corp., U.S.A.