2019 NINJA® ZX™-14R ABS

PARTS DIAGRAM

Cables

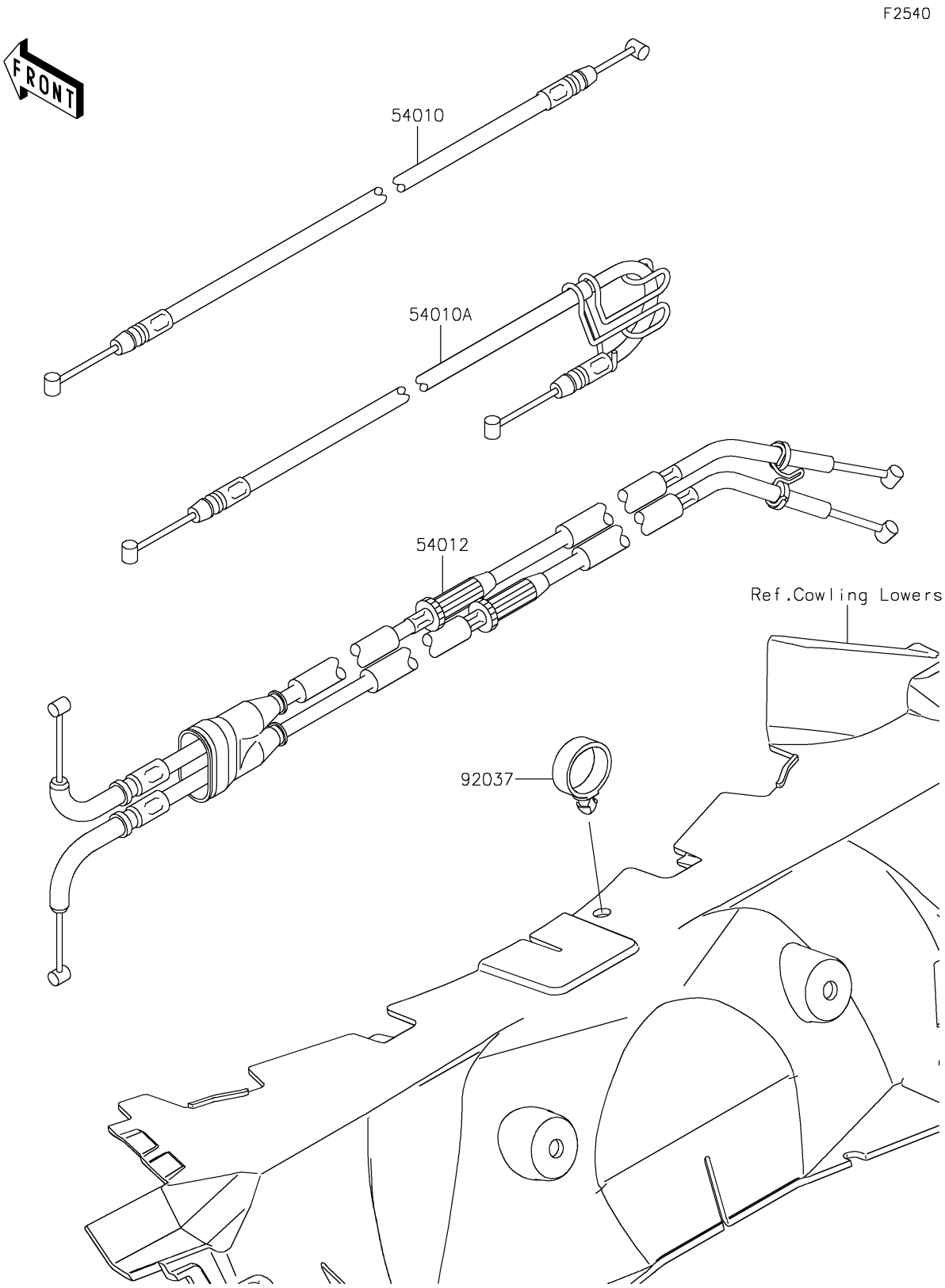

© 2026 Kawasaki Motors Corp., U.S.A.

2019 NINJA® ZX™-14R ABS

PARTS LIST

Cables

ITEM NAME	PART NUMBER	QUANTITY
CABLE,SEAT LOCK,RR (Ref # 54010)	54010-0585	1
CABLE,SEAT LOCK,FR (Ref # 54010A)	54010-0589	1
CABLE-THROTTLE (Ref # 54012)	54012-0638	1
CLAMP,HOSE (Ref # 92037)	92037-1827	1

© 2026 Kawasaki Motors Corp., U.S.A.