2020 NINJA® ZX™-14R ABS PARTS DIAGRAM

Seat

F2510

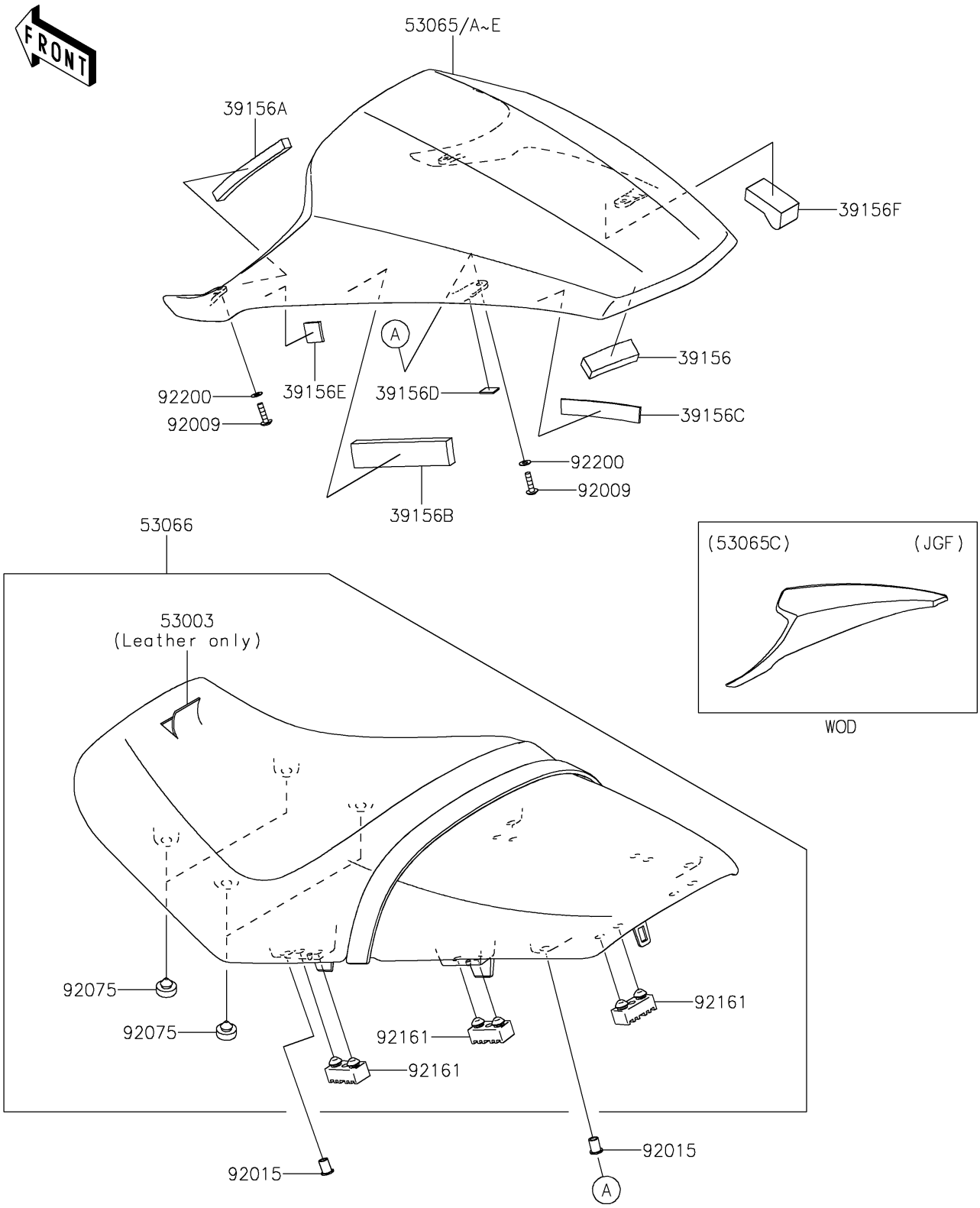

© 2025 Kawasaki Motors Corp., U.S.A.

2020 NINJA® ZX™-14R ABS PARTS LIST

Seat

ITEM NAME	PART NUMBER	QUANTITY
PAD,20X50X11 (Ref # 39156)	39156-0839	2
PAD,10X130X10 (Ref # 39156A)	39156-0880	2
PAD,25X120X10 (Ref # 39156B)	39156-0881	2
PAD,15X90X2 (Ref # 39156C)	39156-0883	2
PAD,12X16X1.5 (Ref # 39156D)	39156-0884	2
PAD,20X20X3 (Ref # 39156E)	39156-0896	2
PAD (Ref # 39156F)	39156-0919	1
LEATHER,SEAT,BLACK (Ref # 53003)	53003-0382-MA	1
COVER SEAT,M.D.BLACK (Ref # 53065A)	53065-0065-17K	1
SEAT-ASSY,DUAL,BLK+BAND BLK (Ref # 53066)	53066-0433-12Y	1
SCREW,5X20 (Ref # 92009)	92009-1934	4
NUT,WELL,5MM (Ref # 92015)	92015-1757	4
DAMPER,10X20X8 (Ref # 92075)	92075-1927	4
DAMPER,SEAT (Ref # 92161)	92161-0050	6
WASHER,NYLON,5.3X11.5X0.5 (Ref # 92200)	92200-1480	4

© 2025 Kawasaki Motors Corp., U.S.A.