2020 NINJA® ZX™-14R ABS PARTS DIAGRAM

Fuel Tank(JJF-JLF)

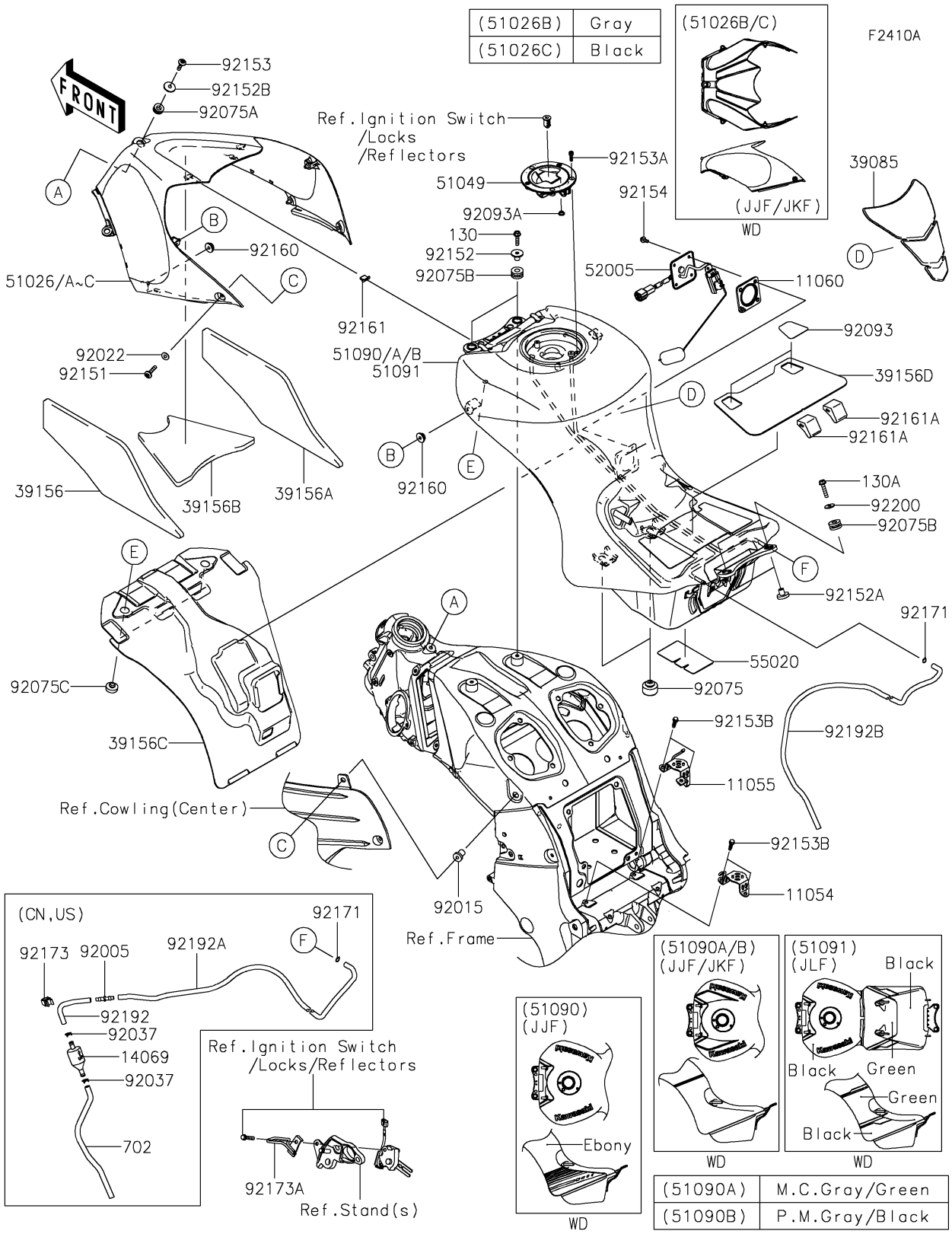

© 2025 Kawasaki Motors Corp., U.S.A.

2020 NINJA® ZX™-14R ABS PARTS LIST

Fuel Tank(JJF-JLF)

ITEM NAME	PART NUMBER	QUANTITY
BRACKET,FUEL TANK,CNT,LH (Ref # 11054)	11054-0681	1
BRACKET,FUEL TANK,CNT,RH (Ref # 11055)	11055-0063	1
GASKET,FUEL GAUGE (Ref # 11060)	11060-1952	1
BREATHER (Ref # 14069)	14069-0703	1
PAD-TANK (Ref # 39085)	39085-0011	1
PAD,TANK COVER,LH (Ref # 39156)	39156-0780	1
PAD,TANK COVER,RH (Ref # 39156A)	39156-0781	1
PAD,TANK COVER,CNT (Ref # 39156B)	39156-0782	1
PAD (Ref # 39156C)	39156-0794	1
PAD,FUEL TANK (Ref # 39156D)	39156-0863	1
COVER TANK,FUEL,M.D.BLACK (Ref # 51026)	51026-0008-17K	1
CAP-TANK,FUEL (Ref # 51049)	51049-0715	1
TANK-COMP-FUEL,M.D.BLACK+GRN (Ref # 51091)	51091-5050-65L	1
GAUGE,FUEL (Ref # 52005)	52005-0093	1
GUARD,FUEL TANK (Ref # 55020)	55020-0551	1
FITTING (Ref # 92005)	92005-0096	1
NUT,RUBBER,6MM (Ref # 92015)	92015-1692	2
WASHER,6.5X16X1 (Ref # 92022)	92022-1143	2
CLAMP,TUBE (Ref # 92037)	92037-147	2
DAMPER (Ref # 92075)	92075-015	2
DAMPER (Ref # 92075A)	92075-1634	1
DAMPER,10X24X12 (Ref # 92075B)	92075-1690	4
DAMPER,9X24X14 (Ref # 92075C)	92075-281	2
SEAL (Ref # 92093)	92093-0583	2
SEAL,FUEL TANK CAP (Ref # 92093A)	92093-1030	1
BOLT,SOCKET,6X30 (Ref # 92151)	92151-1605	2
COLLAR (Ref # 92152)	92152-0048	2
COLLAR (Ref # 92152A)	92152-0364	2
COLLAR (Ref # 92152B)	92152-0424	1

© 2025 Kawasaki Motors Corp., U.S.A.

2020 NINJA® ZX™-14R ABS PARTS LIST

Fuel Tank(JJF-JLF)

ITEM NAME	PART NUMBER	QUANTITY
BOLT-FLANGED,6X25 (Ref # 130)	130BA0625	2
BOLT-FLANGED,6X30 (Ref # 130A)	130BA0630	2
TUBE-RUBBER,7X10X240 (Ref # 702)	702A07240	1
BOLT,SOCKET,6X23 (Ref # 92153)	92153-1267	1
BOLT,SOCKET,5X16 (Ref # 92153A)	92153-1616	3
BOLT,FLANGED,6X20 (Ref # 92153B)	92153-1694	4
BOLT,FLANGED,5X12 (Ref # 92154)	92154-1856	4
DAMPER (Ref # 92160)	92160-1613	4
DAMPER (Ref # 92161)	92161-0365	2
DAMPER (Ref # 92161A)	92161-1481	2
CLAMP (Ref # 92171)	92171-0573	1
CLAMP (Ref # 92171)	92171-0573	2
CLAMP,PIPE (Ref # 92173)	92173-0985	1
CLAMP (Ref # 92173A)	92173-1029	1
TUBE,BREATHER,INNER (Ref # 92192)	92192-0615	1
TUBE,BREATHER,UPP (Ref # 92192A)	92192-0648	1
TUBE,DRAIN,6X9X895 (Ref # 92192B)	92192-1675	1
WASHER,6.5X20X1.6 (Ref # 92200)	92200-0283	2

© 2025 Kawasaki Motors Corp., U.S.A.