2020 NINJA® ZX™-14R ABS PARTS DIAGRAM

Balancer

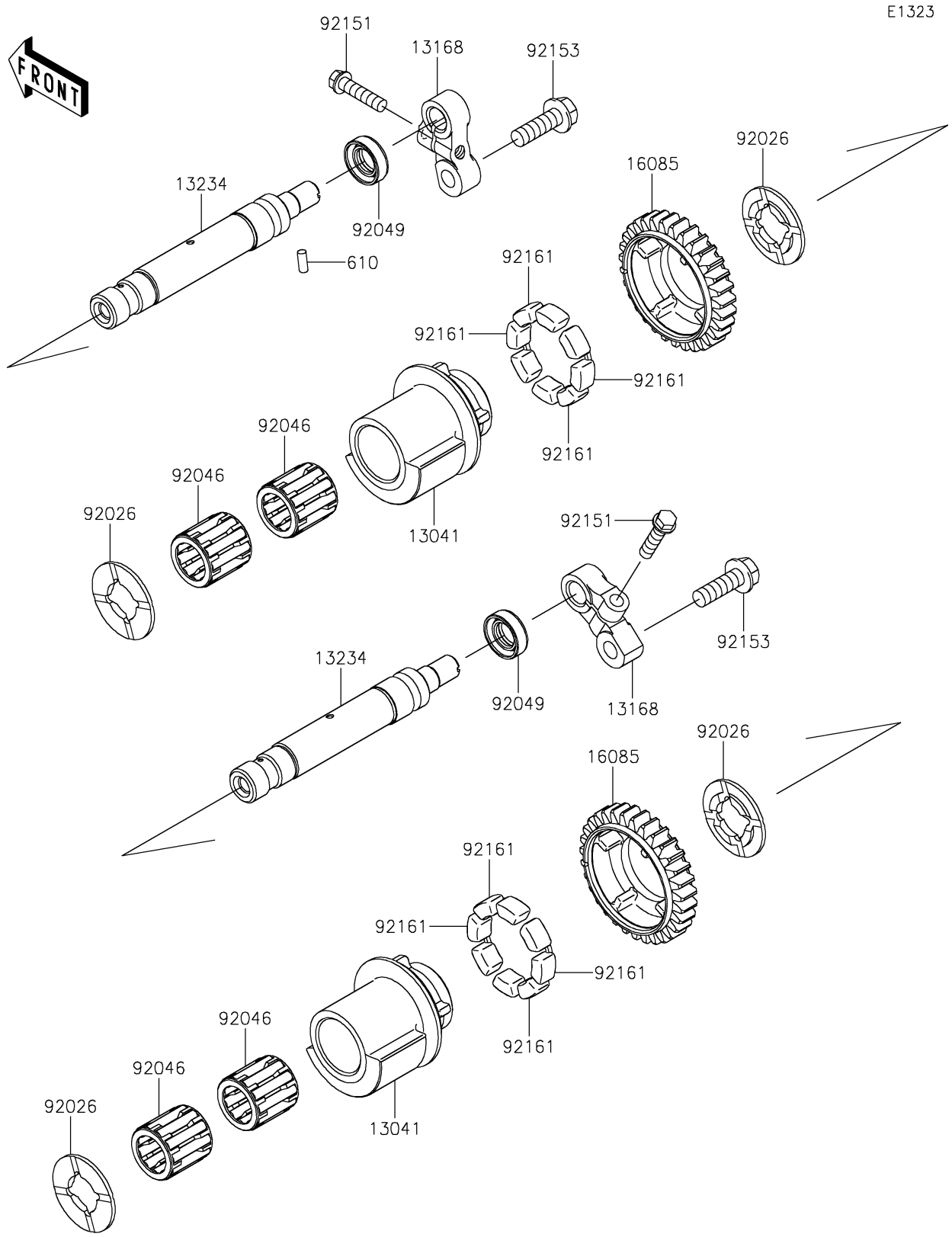

© 2025 Kawasaki Motors Corp., U.S.A.

2020 NINJA® ZX™-14R ABS PARTS LIST

Balancer

ITEM NAME	PART NUMBER	QUANTITY
BALANCER (Ref # 13041)	13041-0554	2
LEVER (Ref # 13168)	13168-0115	2
SHAFT-COMP (Ref # 13234)	13234-0038	2
GEAR,31T (Ref # 16085)	16085-0084	2
ROLLER,4X10 (Ref # 610)	610A0410	1
SPACER (Ref # 92026)	92026-0730	4
BEARING-NEEDLE (Ref # 92046)	92046-1266	4
SEAL-OIL,TC 12X22X7 (Ref # 92049)	92049-2204	2
BOLT,FLANGED-SMALL,6X25 (Ref # 92151)	92151-1930	2
BOLT,FLANGED,8X25 (Ref # 92153)	92153-1562	2
DAMPER (Ref # 92161)	92161-1055	8

© 2025 Kawasaki Motors Corp., U.S.A.