2019 VULCAN® 1700 VAQUERO® ABS PARTS DIAGRAM

Saddlebags(Side Bag Bracket)

F2873

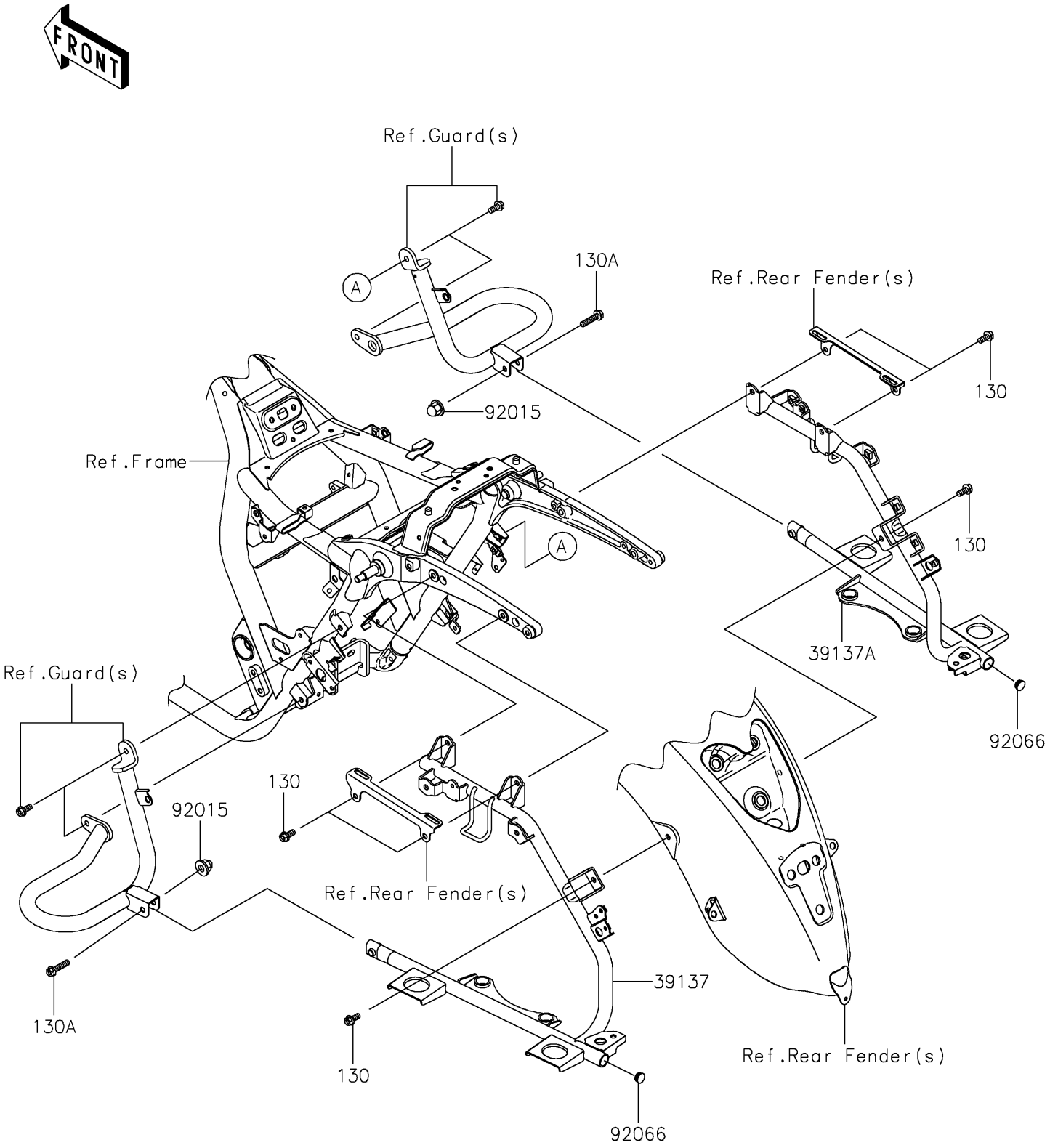

© 2024 Kawasaki Motors Corp., U.S.A.

2019 VULCAN® 1700 VAQUERO® ABS PARTS LIST

Saddlebags(Side Bag Bracket)

ITEM NAME	PART NUMBER	QUANTITY
BOLT-FLANGED,8X18 (Ref # 130)	130BB0818	6
BOLT-FLANGED,8X35 (Ref # 130A)	130BB0835	2
STAY-COMP,PANNIER,LH (Ref # 39137)	39137-0558	1
STAY-COMP,PANNIER,RH (Ref # 39137A)	39137-0559	1
NUT,CAP,8MM,BLACK (Ref # 92015)	92015-1174	2
PLUG (Ref # 92066)	92066-1306	2

© 2024 Kawasaki Motors Corp., U.S.A.