2017 Vulcan 1700 Vaquero ABS

PARTS DIAGRAM

Oil Filter

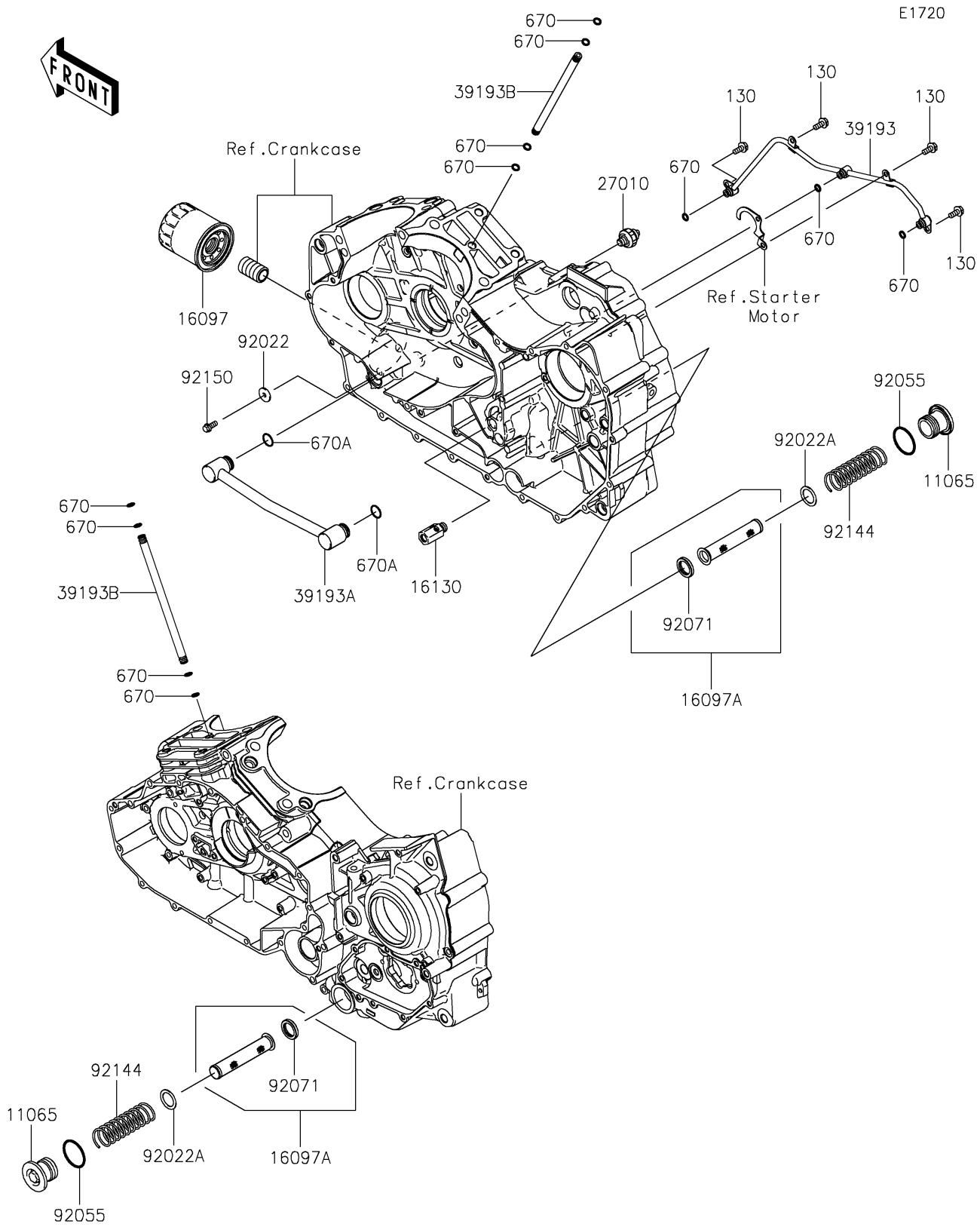

© 2026 Kawasaki Motors Corp., U.S.A.

2017 Vulcan 1700 Vaquero ABS

PARTS LIST

Oil Filter

ITEM NAME	PART NUMBER	QUANTITY
CAP,OIL FILTER (Ref # 11065)	11065-0244	2
BOLT-FLANGED,6X14 (Ref # 130)	130BA0614	4
FILTER-ASSY-OIL (Ref # 16097)	16097-0008	1
FILTER-ASSY-OIL (Ref # 16097A)	16097-1058	2
VALVE-ASSY-RELIEF (Ref # 16130)	16130-1058	1
SWITCH,OIL PRESSURE (Ref # 27010)	27010-1313	1
PIPE-OIL,RH CASE,OUTSIDE (Ref # 39193)	39193-0047	1
PIPE-OIL,RH CASE,INSIDE (Ref # 39193A)	39193-0048	1
PIPE-OIL,CASE-HEAD (Ref # 39193B)	39193-1045	2
O RING,7MM (Ref # 670)	670D1507	11
O RING,16MM (Ref # 670A)	670D2016	2
WASHER,6X19.5X2 (Ref # 92022)	92022-1517	1
WASHER,20.1X28X1 (Ref # 92022A)	92022-1547	2
RING-O,35.2X2.4 (Ref # 92055)	92055-1358	2
GROMMET,OIL STRAINER (Ref # 92071)	92071-100	2
SPRING (Ref # 92144)	92144-1106	2
BOLT,6X14 (Ref # 92150)	92150-1916	1

© 2026 Kawasaki Motors Corp., U.S.A.