# 2020 VULCAN® 900 CLASSIC LT PARTS DIAGRAM

## Headlight(s)

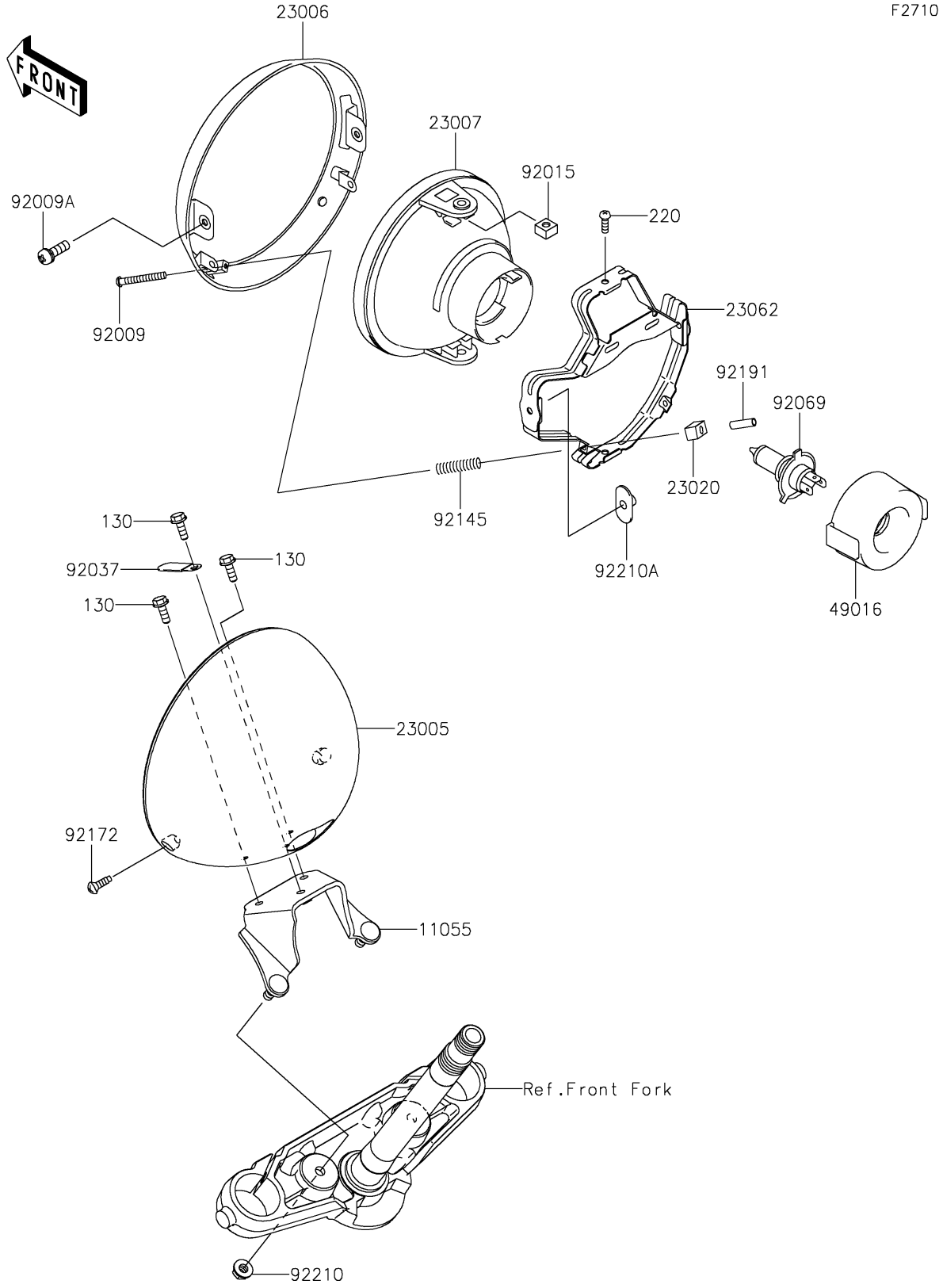


© 2026 Kawasaki Motors Corp., U.S.A.

# 2020 VULCAN® 900 CLASSIC LT PARTS LIST

Headlight(s)

| ITEM NAME | PART NUMBER | QUANTITY |
|---|---|---|
| BRACKET,HEAD LAMP,SILVER (Ref # 11055) | 11055-1167-CE | 1 |
| BOLT-FLANGED,6X16 (Ref # 130) | 130BA0616 | 3 |
| SCREW-PAN-CROS,5X16 (Ref # 220) | 220AA0516 | 2 |
| BODY-COMP-HEAD LAMP (Ref # 23005) | 23005-0304 | 1 |
| RIM-LAMP (Ref # 23006) | 23006-1081 | 1 |
| LENS-COMP,HEAD LAMP (Ref # 23007) | 23007-1396 | 1 |
| NUT,4MM,FOCUS ADJUST (Ref # 23020) | 23020-018 | 2 |
| BRACKET-COMP,HEAD LAMP (Ref # 23062) | 23062-1132 | 1 |
| COVER-SEAL,SOCKET (Ref # 49016) | 49016-1203 | 1 |
| SCREW,FOCUS ADJUST,4X60 (Ref # 92009) | 92009-1816 | 2 |
| SCREW,5X16 (Ref # 92009A) | 92009-1879 | 2 |
| NUT,5MM (Ref # 92015) | 92015-1157 | 2 |
| CLAMP,L=45 (Ref # 92037) | 92037-1539 | 1 |
| BULB,12V 60/55W,H4 (Ref # 92069) | 92069-0050 | 1 |
| SPRING,HEAD LAMP LENS (Ref # 92145) | 92145-1268 | 2 |
| SCREW,5X14 (Ref # 92172) | 92172-0145 | 2 |
| TUBE,3.5X5.5X19 (Ref # 92191) | 92191-1217 | 2 |
| NUT,FLANGED,8MM (Ref # 92210) | 92210-0004 | 2 |
| NUT,SPECIAL,5MM (Ref # 92210A) | 92210-1060 | 2 |

© 2026 Kawasaki Motors Corp., U.S.A.