1989 KX250 PARTS DIAGRAM

Gear Change Mechanism

(E1570)

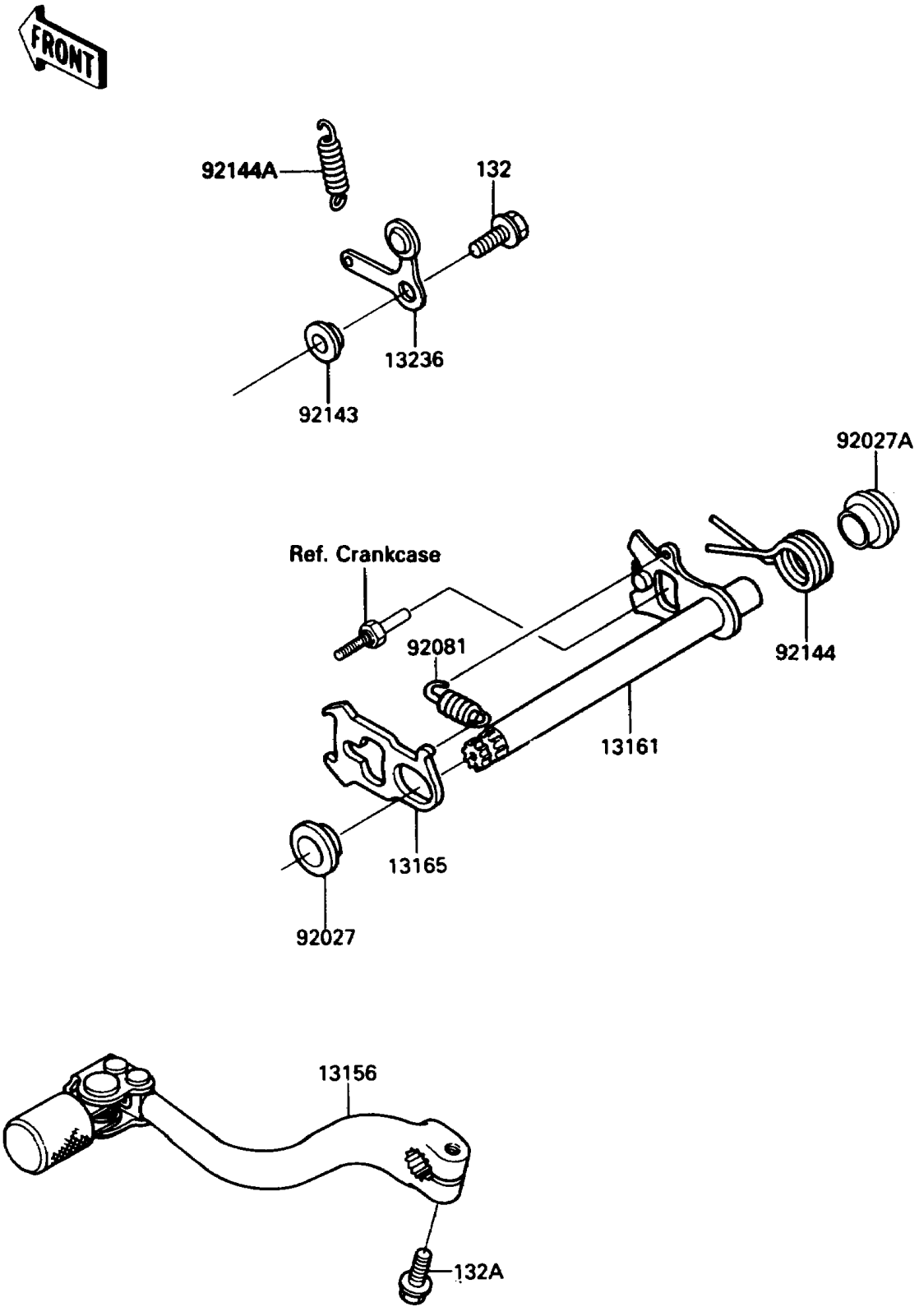

© 2024 Kawasaki Motors Corp., U.S.A.

1989 KX250 PARTS LIST

Gear Change Mechanism

ITEM NAME	PART NUMBER	QUANTITY
LEVER-CHANGE,PEDAL (Ref # 13156)	13156-1240	1
LEVER-COMP-CHANGE SHAFT (Ref # 13161)	13161-1145	1
PAWL,CHANGE LEVER (Ref # 13165)	13165-1132	1
LEVER-COMP,POSITION (Ref # 13236)	13236-1188	1
COLLAR,CHANGE SHAFT,L=5.5 (Ref # 92027)	92027-1512	1
COLLAR,RETURN SPRING (Ref # 92027A)	92027-1682	1
SPRING,CHANGE LEVER (Ref # 92081)	92081-076	1
COLLAR (Ref # 92143)	92143-1055	1
SPRING,CHANGE SHAFT RETURN (Ref # 92144)	92144-1142	1
SPRING (Ref # 92144A)	92144-1382	1
BOLT-FLANGED-SMALL (Ref # 132)	132G0616	1
BOLT-FLANGED-SMALL (Ref # 132A)	132G0625	1

© 2024 Kawasaki Motors Corp., U.S.A.