2021 MULE™ 4000 PARTS DIAGRAM

Frame Fittings

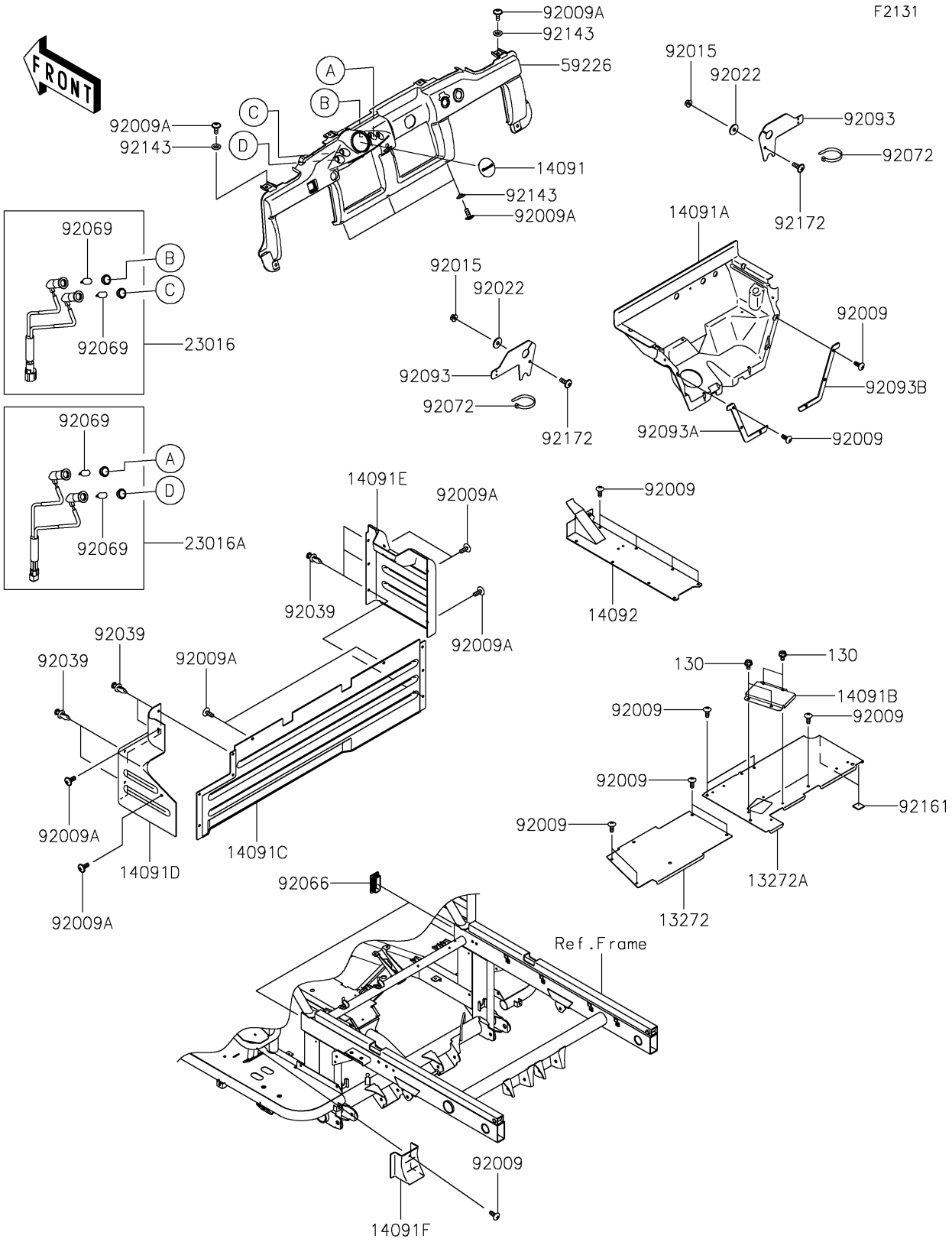

© 2024 Kawasaki Motors Corp., U.S.A.

2021 MULE™ 4000 PARTS LIST

Frame Fittings

ITEM NAME	PART NUMBER	QUANTITY
BOLT-FLANGED,6X10 (Ref # 130)	130BA0610	4
PLATE (Ref # 13272)	13272-0284	1
PLATE (Ref # 13272A)	13272-0285	1
COVER,SPEEDOMETER,F.BLACK (Ref # 14091)	14091-0929-6Z	1
COVER,FLOOR (Ref # 14091A)	14091-1378	1
COVER (Ref # 14091B)	14091-1666	1
COVER,FRONT SEAT,CNT (Ref # 14091C)	14091-7531	1
COVER,FRONT SEAT,LH (Ref # 14091D)	14091-7541	1
COVER,FRONT SEAT,RH (Ref # 14091E)	14091-7542	1
COVER,PARKING CABLE (Ref # 14091F)	14091-7551	1
COVER,FLOOR,CNT,FR (Ref # 14092)	14092-0832	1
LAMP-ASSY,PARKING&WATER TEMP (Ref # 23016)	23016-0649	1
LAMP-ASSY,DFI&OIL PRESSURE (Ref # 23016A)	23016-0650	1
PANEL-CONTROL (Ref # 59226)	59226-0749	1
SCREW,TAPPING,6X16 (Ref # 92009)	92009-1166	23
SCREW,6X16 (Ref # 92009A)	92009-1621	12
NUT,FLANGED,6MM (Ref # 92015)	92015-1367	2
WASHER,6.5X20X1.6,BLACK (Ref # 92022)	92022-1346	2
RIVET (Ref # 92039)	92039-0776	7
PLUG (Ref # 92066)	92066-7505	2
BULB,12V 1.7W,T10WB (Ref # 92069)	92069-0103	4
BAND,L=368.3 (Ref # 92072)	92072-3872	2
SEAL,LOWER COVER (Ref # 92093)	92093-0181	2
SEAL,FRONT FENDER,LH (Ref # 92093A)	92093-1293	1
SEAL,FRONT FENDER,RH (Ref # 92093B)	92093-1294	1
COLLAR (Ref # 92143)	92143-1087	5
DAMPER (Ref # 92161)	92161-0020	2
SCREW,6X18 (Ref # 92172)	92172-0002	2

© 2024 Kawasaki Motors Corp., U.S.A.