2021 MULE SX™ 4x4 XC FI PARTS DIAGRAM

Brake Pedal/Throttle Lever

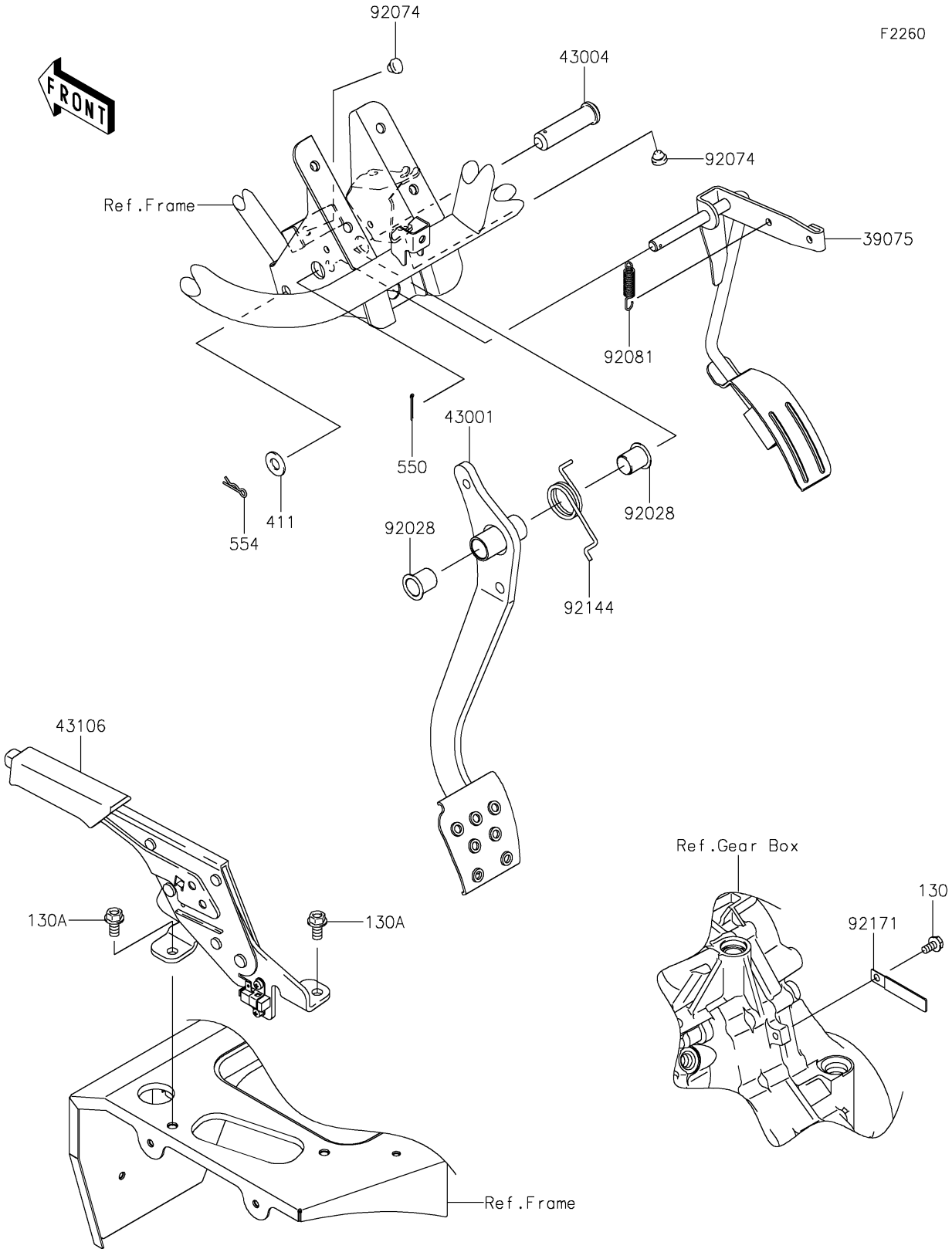

© 2024 Kawasaki Motors Corp., U.S.A.

2021 MULE SX™ 4x4 XC FI PARTS LIST

Brake Pedal/Throttle Lever

ITEM NAME	PART NUMBER	QUANTITY
BOLT-FLANGED,6X12 (Ref # 130)	130AA0612	1
BOLT-FLANGED,8X16 (Ref # 130A)	130CA0816	2
LEVER-THROTTLE (Ref # 39075)	39075-0022	1
WASHER-PLAIN,10MM (Ref # 411)	411AA1000	1
LEVER-BRAKE,PEDAL (Ref # 43001)	43001-0751	1
SHAFT-BRAKE (Ref # 43004)	43004-1128	1
LEVER-ASSY-PARKING BRAKE (Ref # 43106)	43106-0005	1
PIN-COTTER,2.5X25 (Ref # 550)	550AA2525	1
PIN-SNAP,10MM (Ref # 554)	554DA1000	1
BUSHING (Ref # 92028)	92028-1571	2
PLUG,7X2 (Ref # 92074)	92074-028	2
SPRING (Ref # 92081)	92081-1922	1
SPRING (Ref # 92144)	92144-1536	1
CLAMP,L=60 (Ref # 92171)	92171-0652	1

© 2024 Kawasaki Motors Corp., U.S.A.