2021 MULE SX™ PARTS DIAGRAM

Fuel Evaporative System

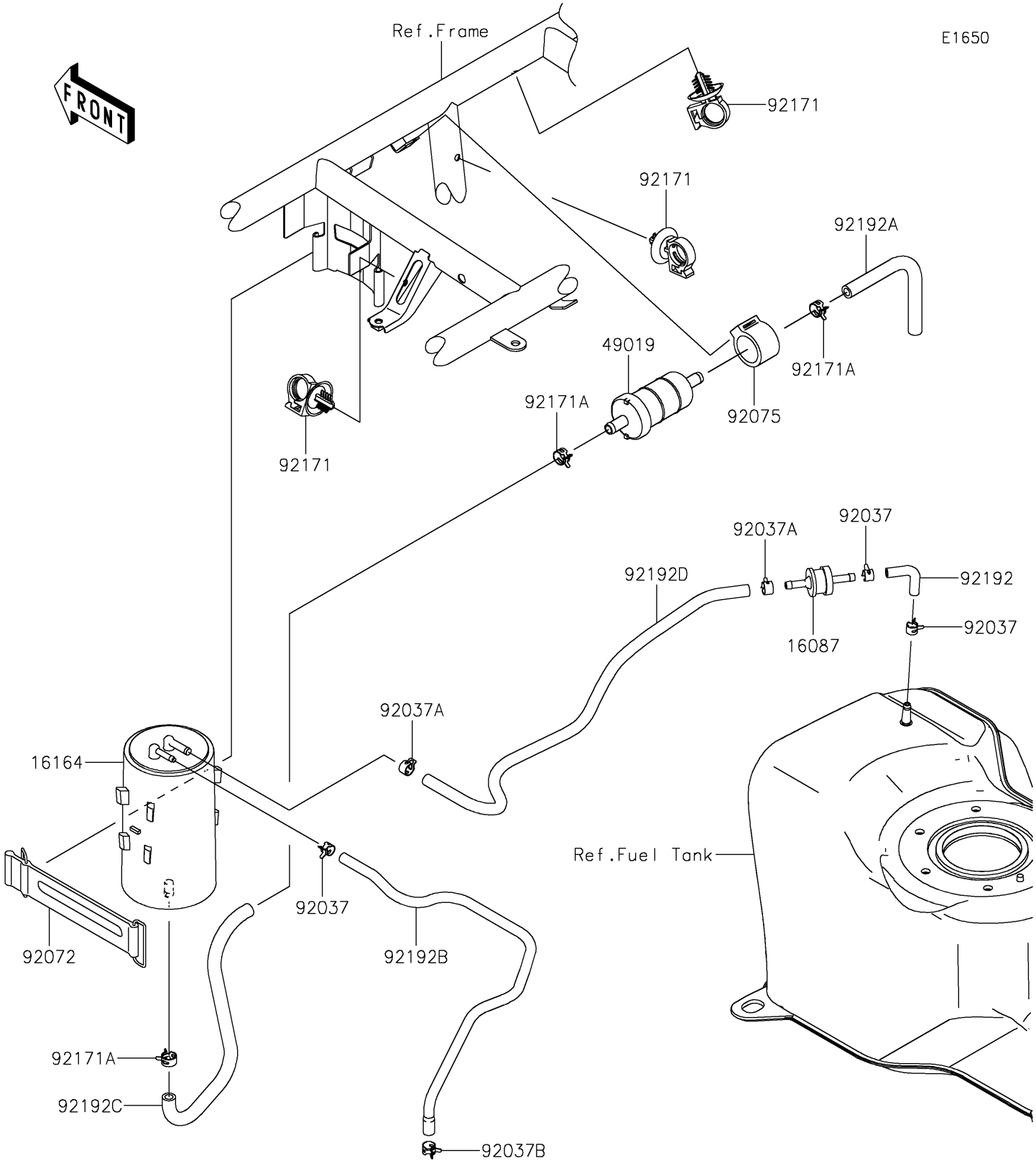

© 2024 Kawasaki Motors Corp., U.S.A.

2021 MULE SX™ PARTS LIST

Fuel Evaporative System

ITEM NAME	PART NUMBER	QUANTITY
VALVE-CHECK (Ref # 16087)	16087-0008	1
CANISTER (Ref # 16164)	16164-0018	1
FILTER-FUEL (Ref # 49019)	49019-0032	1
CLAMP,TUBE (Ref # 92037)	92037-1461	3
CLAMP,TUBE (Ref # 92037A)	92037-1505	2
CLAMP (Ref # 92037B)	92037-2113	1
BAND,L=168 (Ref # 92072)	92072-1306	1
DAMPER,FUEL FILTER (Ref # 92075)	92075-1853	1
CLAMP (Ref # 92171)	92171-0453	3
CLAMP (Ref # 92171A)	92171-0515	3
TUBE,FUEL TANK-CHECK VALVE (Ref # 92192)	92192-0067	1
TUBE,FILTER-AIR (Ref # 92192A)	92192-0609	1
TUBE,CANISTER-DUCT (Ref # 92192B)	92192-1027	1
TUBE,CANISTER-FILTER (Ref # 92192C)	92192-1639	1
TUBE,VALVE-CANISTER (Ref # 92192D)	92192-1641	1

© 2024 Kawasaki Motors Corp., U.S.A.