2016 MULE PRO-FXT™ RANCH EDITION PARTS DIAGRAM

Headlight(s)

F2710

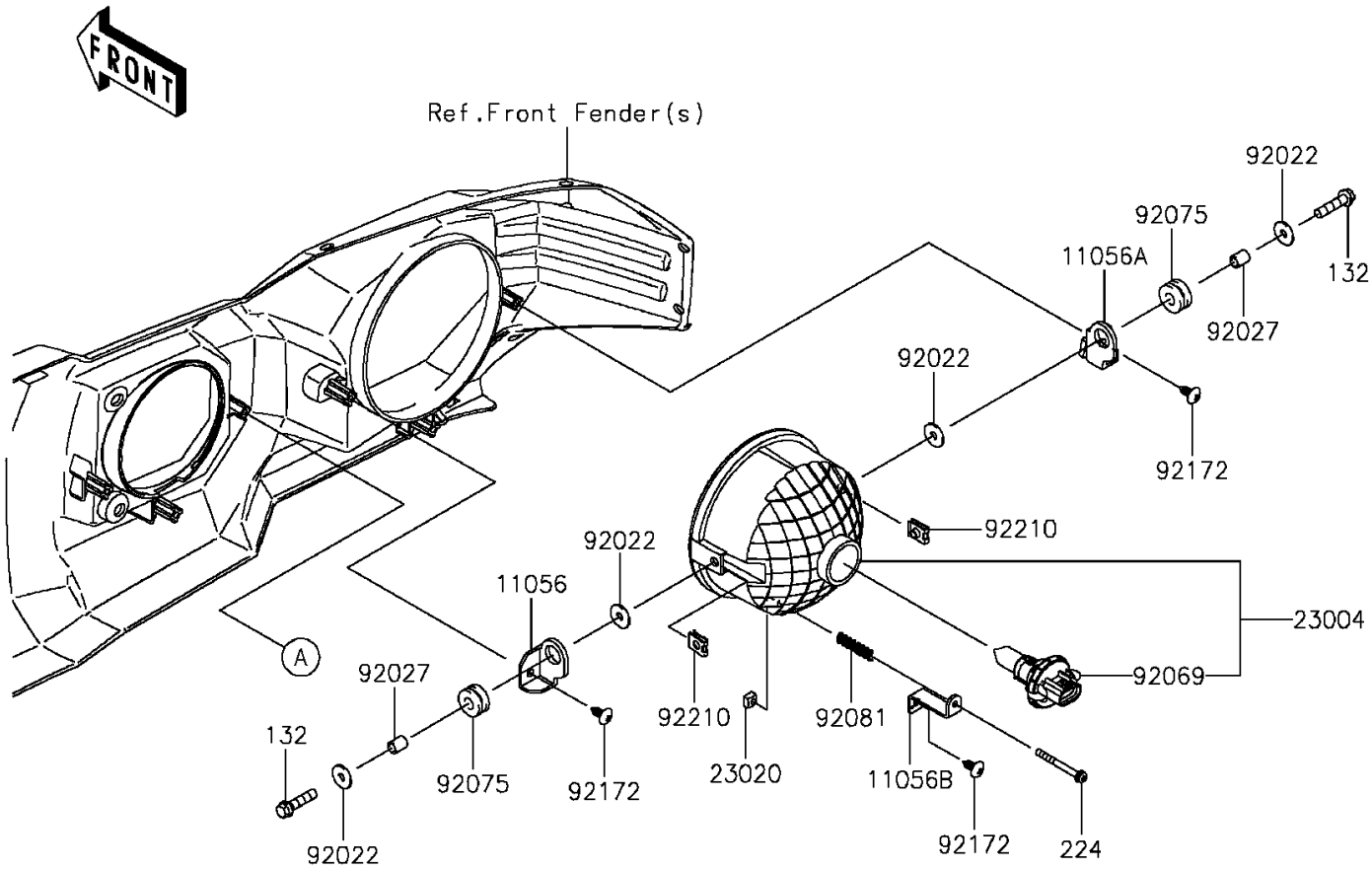

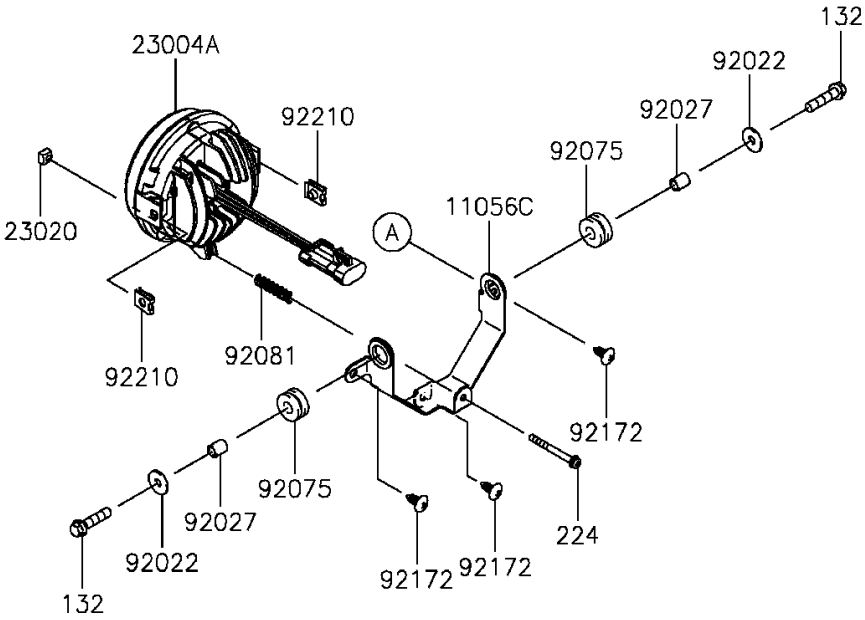

© 2024 Kawasaki Motors Corp., U.S.A.

2016 MULE PRO-FXT™ RANCH EDITION PARTS LIST

Headlight(s)

ITEM NAME	PART NUMBER	QUANTITY
BRACKET,LH (Ref # 11056)	11056-2931	2
BRACKET,RH (Ref # 11056A)	11056-2932	2
BRACKET (Ref # 11056B)	11056-2933	2
BRACKET,LAMP STAY (Ref # 11056C)	11056-3857	2
BOLT-FLANGED-SMALL,6X25 (Ref # 132)	132BA0625	8
SCREW-PAN-WP-CROS (Ref # 224)	224AA0440	4
LAMP-HEAD (Ref # 23004)	23004-0339	2
LAMP-HEAD,LED (Ref # 23004A)	23004-0341	2
NUT,4MM,FOCUS ADJUST (Ref # 23020)	23020-018	4
WASHER,6.5X20X1.6 (Ref # 92022)	92022-125	12
COLLAR,6.8X10X12 (Ref # 92027)	92027-162	8
BULB,H13-12-8V (Ref # 92069)	92069-0082	2
DAMPER,10X24X12 (Ref # 92075)	92075-1690	8
SPRING,FOCUS ADJUST (Ref # 92081)	92081-1896	4
SCREW,6X16 (Ref # 92172)	92172-0284	12
NUT (Ref # 92210)	92210-1125	8

© 2024 Kawasaki Motors Corp., U.S.A.