2016 MULE PRO-FXT™ RANCH EDITION PARTS DIAGRAM

Guard(s)

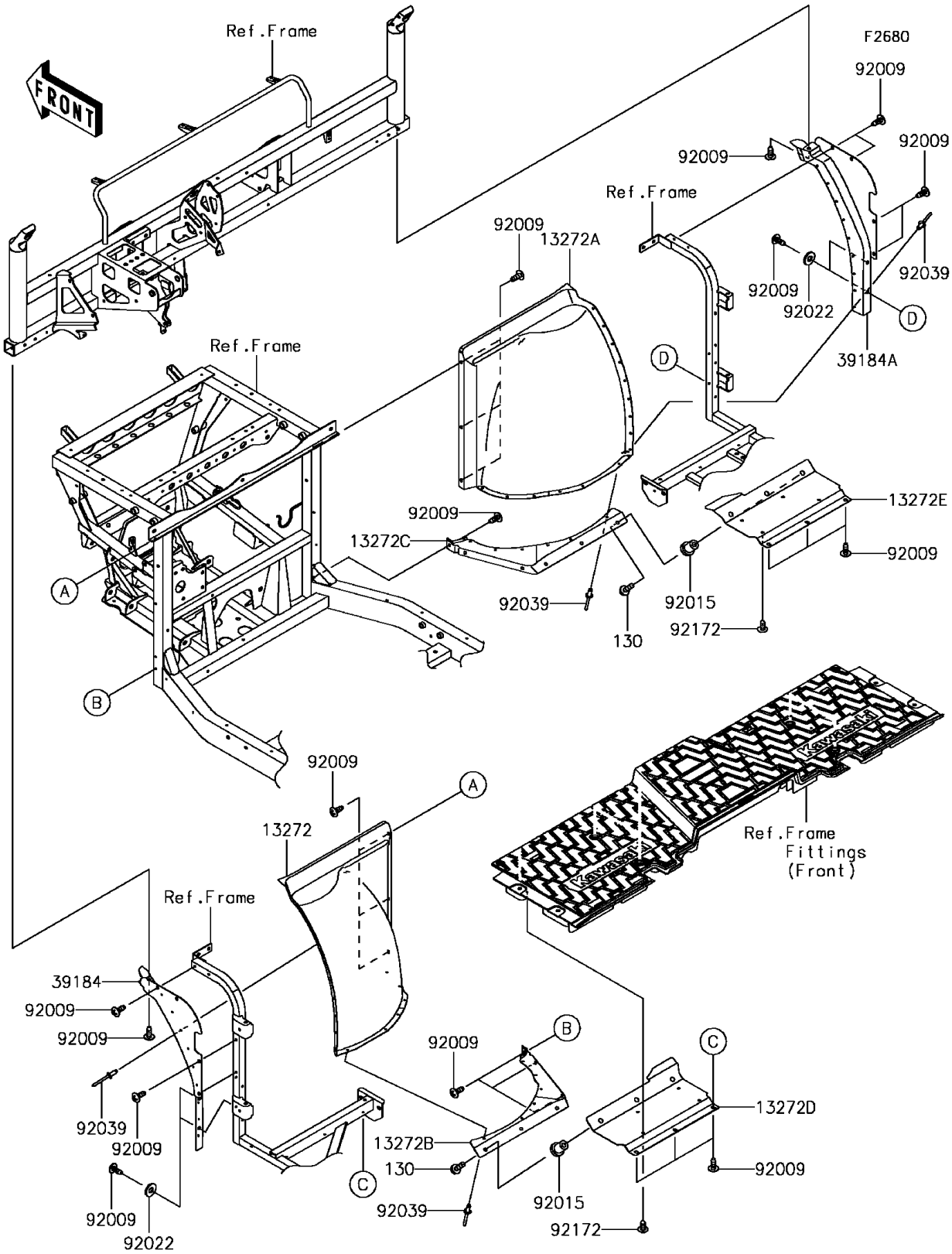

© 2024 Kawasaki Motors Corp., U.S.A.

2016 MULE PRO-FXT™ RANCH EDITION PARTS LIST

Guard(s)

ITEM NAME	PART NUMBER	QUANTITY
BOLT-FLANGED,6X20 (Ref # 130)	130BA0620	6
PLATE (Ref # 13272)	13272-2323	1
PLATE (Ref # 13272A)	13272-2324	1
PLATE (Ref # 13272B)	13272-2327	1
PLATE (Ref # 13272C)	13272-2328	1
PLATE,UNDER GUARD,LH (Ref # 13272D)	13272-2330	1
PLATE,UNDER GUARD,RH (Ref # 13272E)	13272-2331	1
BRACKET-ASSY,SIDE,LH (Ref # 39184)	39184-0718	1
BRACKET-ASSY,SIDE,RH (Ref # 39184A)	39184-0719	1
SCREW,TAPPING,6X16 (Ref # 92009)	92009-1166	32
NUT,RUBBER,6MM (Ref # 92015)	92015-1692	6
WASHER,8.2X19X2 (Ref # 92022)	92022-1533	4
RIVET (Ref # 92039)	92039-0778	30
SCREW,6X16 (Ref # 92172)	92172-0284	8

© 2024 Kawasaki Motors Corp., U.S.A.