2016 MULE PRO-FX™ EPS LE

PARTS DIAGRAM

Fuel Pump

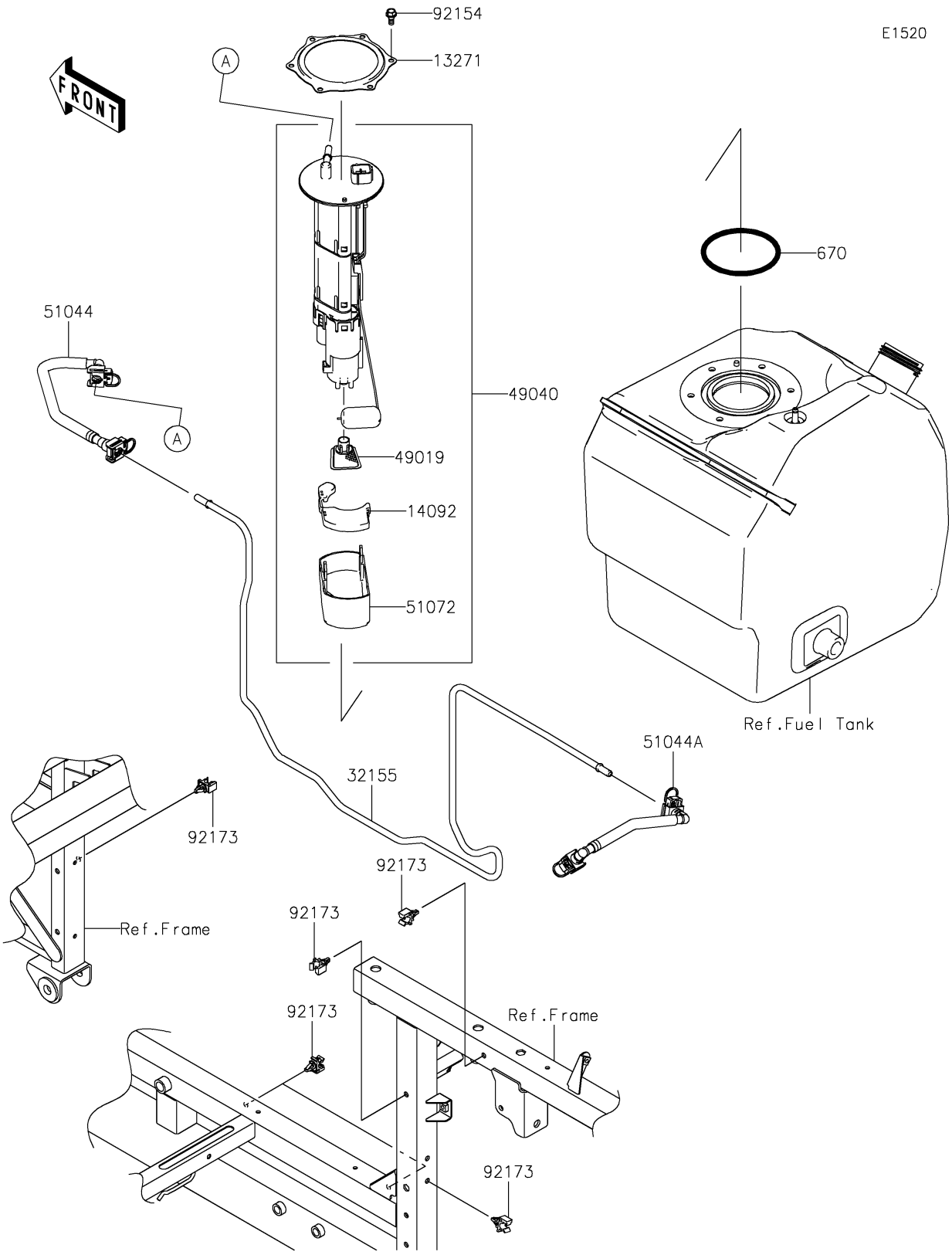

© 2026 Kawasaki Motors Corp., U.S.A.

2016 MULE PRO-FX™ EPS LE

PARTS LIST

Fuel Pump

ITEM NAME	PART NUMBER	QUANTITY
PLATE (Ref # 13271)	13271-0980	1
COVER (Ref # 14092)	14092-1044	1
PIPE,FUEL (Ref # 32155)	32155-1619	1
FILTER-FUEL (Ref # 49019)	49019-0013	1
PUMP-FUEL (Ref # 49040)	49040-0733	1
TUBE-ASSY,TANK-PIPE (Ref # 51044)	51044-0751	1
TUBE-ASSY,PIPE-INJECTION PIPE (Ref # 51044A)	51044-0752	1
CHAMBER-FUEL (Ref # 51072)	51072-0003	1
O RING (Ref # 670)	670E5090	1
BOLT,FUEL PUMP (Ref # 92154)	92154-1326	6
CLAMP,FUEL PIPE (Ref # 92173)	92173-1213	6

© 2026 Kawasaki Motors Corp., U.S.A.