2016 MULE PRO-FX™ EPS LE

PARTS DIAGRAM

Gear Change Mechanism

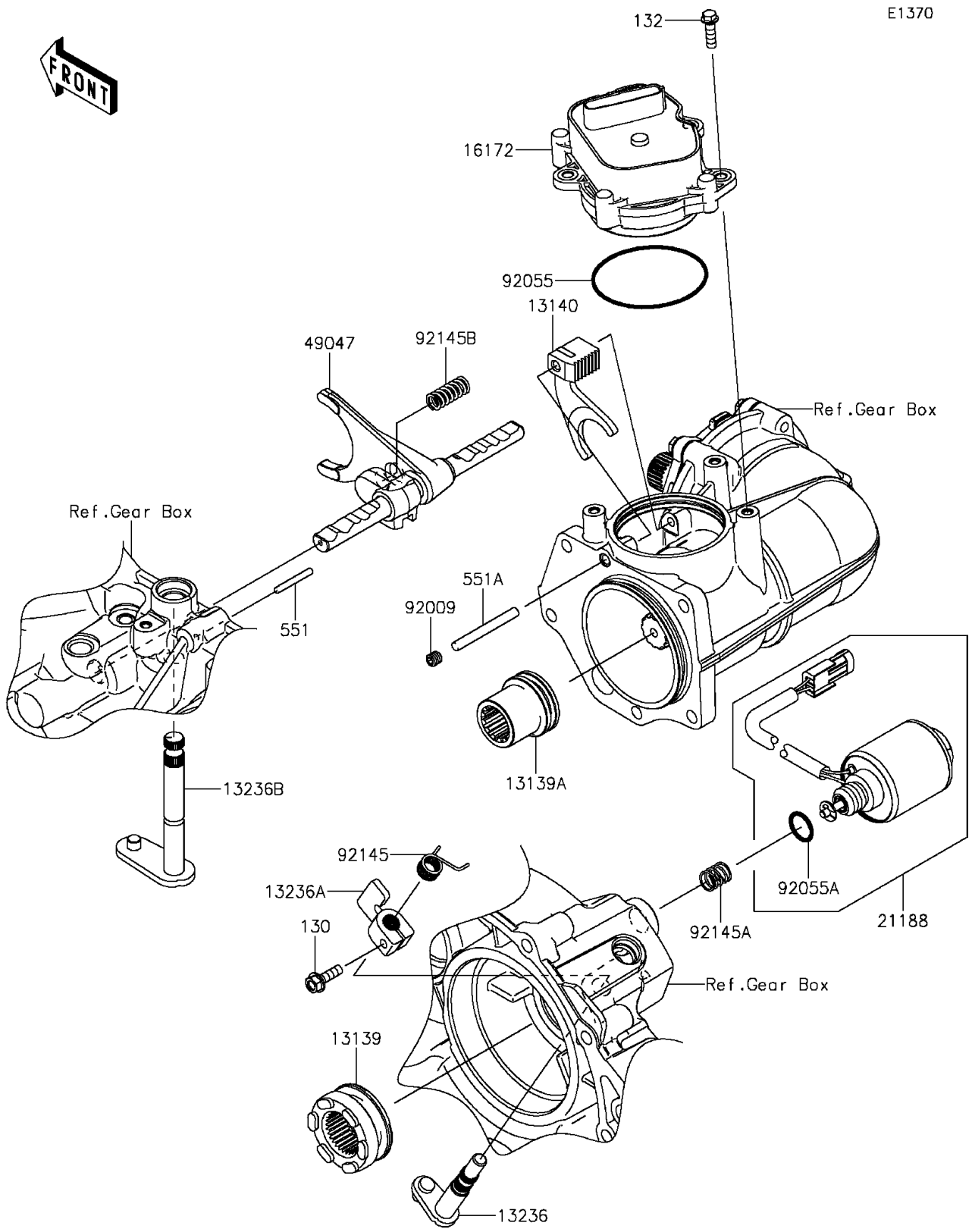

© 2026 Kawasaki Motors Corp., U.S.A.

2016 MULE PRO-FX™ EPS LE

PARTS LIST

Gear Change Mechanism

ITEM NAME	PART NUMBER	QUANTITY
BOLT-FLANGED,6X20 (Ref # 130)	130BA0620	1
SHIFTER (Ref # 13139)	13139-0019	1
SHIFTER (Ref # 13139A)	13139-0021	1
FORK-SHIFT (Ref # 13140)	13140-0639	1
BOLT-FLANGED-SMALL,6X20 (Ref # 132)	132BA0620	3
LEVER-COMP,DIFF LOCK (Ref # 13236)	13236-0744	1
LEVER-COMP,DIFF LOCK (Ref # 13236A)	13236-0745	1
LEVER-COMP,CHANGE SHIFT (Ref # 13236B)	13236-0746	1
ACTUATOR (Ref # 16172)	16172-0030	1
SOLENOID (Ref # 21188)	21188-0010	1
ROD-SHIFT (Ref # 49047)	49047-0044	1
PIN-DOWEL (Ref # 551)	551A0432	1
PIN-DOWEL,6X56 (Ref # 551A)	551A0656	1
SCREW,SOCKET,8X8 (Ref # 92009)	92009-1977	1
RING-O,1.9X71.8 (Ref # 92055)	92055-0781	1
RING-O (Ref # 92055A)	92055-0829	1
SPRING (Ref # 92145)	92145-1572	1
SPRING (Ref # 92145A)	92145-1573	1
SPRING (Ref # 92145B)	92145-1574	1

© 2026 Kawasaki Motors Corp., U.S.A.